pneU-SA®

N-025 Rodless Cylinder Maintenance Guide

effective 9/97

VALUABLE MAINTENANCE INFORMATION

Serial No. _____

Model No. _____

Assembly No. _____

Stroke _____

Cut Cable _____

To repair this pneU-SA N-025 cylinder order:

Repair Kit No. _____

W.C. Branham Inc.
Customer Service Group
398 Troy Street
River Falls, WI 54022

(715) 426.2000
(715) 426.1400 (Fax)

INSTALLATION TIPS!

1. Adjustable cushions have been pre-set to factory standards. However, your application may require further adjustment after load is attached.

2. When attaching load to pneU-SA Carrier # 5 be careful not to exceed .312" thread engagement. Further engagement could result in cylinder binding and damage to Dust Band Seal # 13.

3. Lubrication of bearing grooves on extrusion is not recommended.

4. If the pneU-SA cylinder is attached to an externally guided load be sure that the cylinder is in perfect alignment with the load. If load and cylinder are not parallel binding will occur resulting in severe damage. Suggestion: Use shoulder bolts to attached load to carrier. This will allow load to float on carrier. Consult factory about Pivot Mount PV option.

5. pneU-SA N-025 cylinder is rated up to 100 psi.

DISASSEMBLY INSTRUCTIONS

1. Move Carrier # 5 to one end. Remove # 28 & # 30 from both ends.

2. While holding # 14 Tensioner Piston/Sheave Assembly on the Head Assy opposite the carrier fully retracted, move the Carrier # 5 towards the opposite end. The Cable # 16 will come up and out of the sheave groove. Move Cable # 16 to the side and remove items # 14 & # 15. Repeat on opposite end.

3. Remove items # 1, # 2 & # 9 from Carrier # 5. Slide carrier to one side in order to expose Carrier Connector # 17.

4. Loosen Set Screws # 20 on both head assemblies.

5. Remove the Dust Band # 13 from its' groove.

6. Remove SHCS # 26 from the head assembly closest to the carrier connector. Move Head Assembly (# 25 or # 27) back to allow face of Connector # 17 to be exposed. Remove Screw # 11 and Cable Clamp # 10 from Connector.

7. Remove SHCS # 26 from the opposite head assembly. Slide Carrier Connector # 17 to that end. Remove Screw # 11 and Cable Clamp # 10.

8. Disconnect Cable Assembly # 16 from Piston # 18. Repeat on opposite end. Remove piston from bore.

9. To remove cable assemblies from Heads # 25 & # 27 remove the cable from the upper hole and pull cable until cable ferrule (end without threaded terminal) is seated against seal assembly. Lightly tap end of ferrule with a drift pin to unseat the seal from its' groove.

10. Clean all parts. Replace any worn items. Relubricate all moving and rotating parts with STP lubricant. Exceptions: Bearings # 4 and the sheave cable groove are not normally lubricated. These parts have self lubrication properties.

11. Refer to pneU-SA N-025 Step by Step Assembly Instructions.

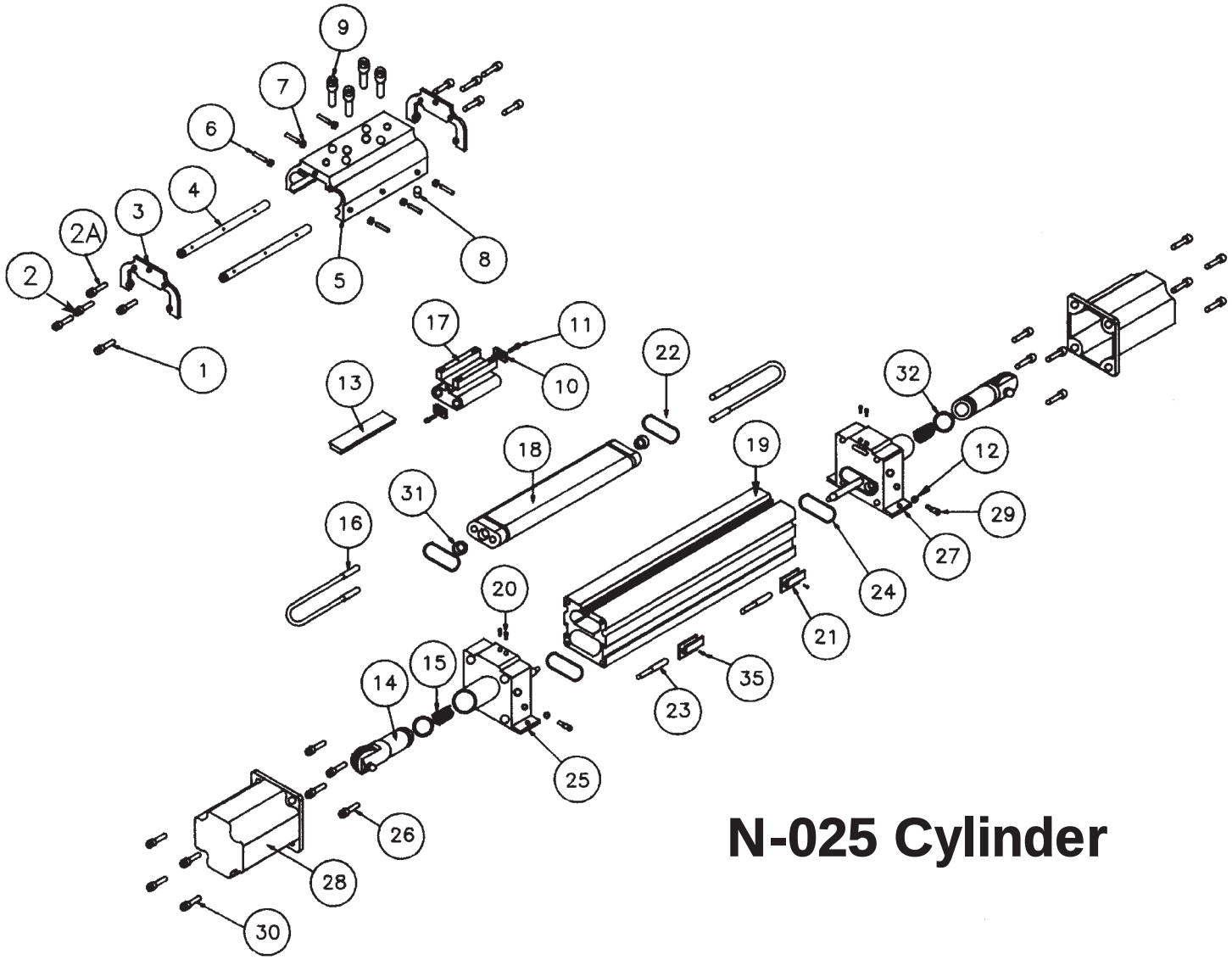

N-025 Cylinder

ITEM#	PART NO.	DESCRIPTION	QTY
1	1891-1048	Screw, Filister 10-24 x 3/8	4
2	1891-1219	Screw, Pan 8-32 x 5/16	4
2a	1891-1239	SHCS 8-32 x 1/4	2
3	1891-1197	End Cover, Carrier N-025	2
4	1890-4093	Bearing, Carrier N-025	2
5	1890-4091	Carrier, N-025	1
6	1891-1040	SSS Cone Point, 8-32 x 1/2	6
7	1100-1088	Nut, Hex Jam 8-32	6
8	1891-1224	Magnet (Optional)	1
9	1870-1028	SHCS 8-32 x 1/2	4
10	1891-4-1222	Clamp, Cable	2
11	1891-1223	HWHS 8-32 x 3/8 Slotted	2
12*	1880-1022	O-Ring, Buna-N -006	2
13	1898-9008	Band, Dust Seal, Specify Stroke	1
14	1898-9003	Tensioner Piston & Sheave Assy	2
15	1891-1193	Spring, Tensioner	2
16*	1898-9009	Cable Assy, N-025, Specify Stroke	2
17	1890-4095	Connecter, Carrier	1

ITEM#	PART NO.	DESCRIPTION	QTY
18	1890-4086	Piston, N-025	1
19	1898-9000	Extrusion Assy, Specify Stroke	1
20	1891-1039	Screw, Set Knurled 6-32 x 1/4	4
21	1890-4097	Bracket, Switch (Optional)	2
22*	1891-1195	O-Ring, Buna-N 2-117	2
23	1891-1236	Switch, Reed (Optional)	2
24*	1891-1192	O-Ring, Buna-N 2-014	2
25	1898-9004	Head, Assy L.H. N-025	1
26	1891-1208	SHCS, 5-40 x 5/8	8
27	1898-9005	Head, Assy R.H. N-025	1
28	1890-4092	Cover, Sheave N-025	2
29	1892-1002	Screw, Cushion	2
30	1891-1208	SHCS, 1/4-20 x 3/8	8
31	1891-1012	Seal, Cushion	2
32*	1891-1214	O-Ring, Buna-N -025	2
35	4000-1146	Pan Hd. Screw 4-40 (Optional)	4
35a	1891-1238	Jam Nut, 4-40 (Optional)	4

***Items in repair kit 1898-9010, specify stroke length.**

STEP BY STEP ASSEMBLY PROCEDURES

Note: Blue Loc-Tite 242 should be used on all fasteners except Cone Point Set Screws # 6.

1. Assemble Cone Point Set Screws # 6 into Carrier # 5. Back set screws out until cone points are flush with bearing groove surface. Hold Bearing # 4 in carrier bearing grooves. *If bearings are not new, line up dimples on bearings with the cone point set screws.*

2. Slip carrier and bearings onto Extrusion # 19. Bearings should be flush with ends of carrier. Hand tighten the Set Screws # 6. If bearings are new, tighten the set screws opposite one another in order to put a cone point dimple into bearings. Back off the set screws enough to allow carrier to move on extrusion. Pull carrier to one end. Check gap between carrier and extrusion. Adjust the two set screws at this end to have as close as an equal gap between the carrier and extrusion as possible. **Finger tighten set screws only.**

3. Repeat procedure above at the opposite end. Finger tighten the center set screws. The carrier should move smoothly on the extrusion with a slight drag. *The drag can be increased by putting more torque on the set screws if desired.*

4. Install Hex Jam Nuts # 7 on set screws and tighten. Check to be sure carrier moves smoothly on extrusion.

5. Install Cushion Seals # 31 into piston center face grooves. *The conical shape of the seal should be outboard.* Install piston O-Rings # 22 on to the piston.

6. Install Cable Assemblies # 16 into Head Assemblies, # 25 & # 27. Thread the end of the cable assemblies without the threaded terminal through the head assembly from the cushion snout side until the seal is centered on the seal groove. Lube seal groove and seal. Manually press the short threaded terminal against the seal. Thus, seating it into the seal groove. When the seal is pressed into its' groove fully, the seal will lock into place.

7. Install O-Ring # 12 on to Cushion Screw # 29, quantity (2) required. Lubricate O-Rings. Install cushion screws into Head Assemblies # 25 and # 27.

8. Prelube the lower bore of Extrusion # 19 with light coating of STP.

9. Lube O-Rings # 24 and install on faces of each head assembly.

10. If the cylinder has reed or hall effect switches slide Brackets # 21 into grooves on extrusion at this time.

11. Attach one Cable Assembly # 16 to Piston # 18.

12. Lubricate Piston # 18 and apply a light coating of lubricant to the cable assembly nylon jacket. Use STP.

13. Ease the piston into the bore of the extrusion. Using a non metallic rod, move the piston to the opposite end. *Flush and/or protruding slightly.*

14. Connect the cables from the other head assembly to the piston.

15. Loop the end of the Cable Assemblies # 16 thru the hole above and opposite so the ferrule (brass end) is now on the cushion snout side of the head(s).

16. Slide Connector # 17 into upper bore. Position at one end. Slide ferrule fully into end of connector. Install Cable Clamp # 10 and Screw # 11 with blue (not red) Loc-Tite® making sure bottom of cable clamp groove is set against the cable's nylon jacket before tightening. Slide Carrier End Cover # 3 on to extrusion at this time.

17. Attach Head Assembly # 25 or # 27 to this end of Extrusion # 19 with (4) SHCS # 26.

18. Move Connector # 17 to opposite end being careful not to damage the nylon jacket on the previously installed cable assembly.

19. Install cable and clamp on this end as outlined in step # 17 above.

20. Install Carrier End Cover # 3 on to extrusion from this end.

21. Attach Head Assembly # 25 or # 27 to this end of Extrusion # 19 with (4) SHCS # 26.

22. Move Carrier # 5 over Carrier Connector # 17 and attach with two # 9 SHCS in opposite corners.

23. Lube the tensioner tube bores on the head assemblies. Install O-Rings # 32 on to Tensioner Piston/Sheave Assemblies # 14. Lube tensioner piston bore as well as O.D. of tensioner piston.

24. Insert Spring # 15 into tensioner tube located on each head assembly.

25. Assemble Sheave/Tensioner Piston Assemblies over Springs # 15 and into the tubes on each head assembly.

26. Insert Cable # 16 into sheave grooves on head assembly that is opposite piston.

27. Move Carrier # 5 towards piston end, thus compressing tensioner spring # 15 fully allowing tensioner piston # 14 to bottom into tensioner tube.

28. Manually compress the other sheave/tensioner tube fully on the opposite end and at the same time guide Cable # 16 into sheave groove while moving carrier toward that end. Cable will roll into sheave groove.

29. Move the carrier to the middle of the extrusion.

30. Remove the two # 9 SHCS from the carrier.

31. Move carrier to expose Carrier Connector # 17.

32. Lube the raceway of the Connector # 17 as well as the grooves and bottom of Dust Band # 13 along its full length.

33. Thread the dust band along the raceway of Connector # 17 and underneath Carrier # 5 to one end. Press the dust band into the extrusion dust band groove. Move the Carrier End Cover # 3 over the seated portion of the dust band. Lift the dust band out of the groove and insert the tip of the dust band back into the groove near the head. Push the dust band firmly into the slot on the head until it bottoms. Press the dust band into the groove moving the Carrier End Cover # 3 out of the way as you progress towards the opposite end. Move the other Carrier End Cover # 3 over the dust band as previously described. Work the dust band into the slot on the head.

Note: The dust band may need to be trimmed. Allow for 3/8" of dust band beyond connection of the head and extrusion.

34. Insert two Set Screws # 20 (flush) into each head to secure dust band.

35. Center Carrier # 5 over Carrier Connector # 17 and attach with four # 9 SHCS. Move carrier end covers to carrier faces.

36. Using four filister head Screws # 1, attach Carrier End Covers # 3 to Carrier Bearings # 4. Apply Blue Loc-Tite® 242 to threads. Tighten firmly but do not over tighten. *Threads in bearings may extrude if over tightened.*

37. Finish carrier end cover installation by attaching # 2a to top center hole of each carrier end cover. Attach qty (2) # 2 to the two lower holes on each end cover.

38. Cycle test cylinder. Check for leaks, function and cushioning.

If your pneU-SA cylinder is used in a production area where downtime is critical, we suggest that a spare cylinder be purchased to insure you from any unexpected mishap. This would allow time for the original cylinder to be returned to the factory for professional repair. Thus, the original cylinder will be like new and guaranteed by W.C. Branham Inc. to function properly.

W.C. BRANHAM INC.