City of Virginia Beach

Public Utilities

Standard Details

Public Utilities

2023

Table of Contents

Section	Title
Section 1	**Introduction**
None	
Section 2	**Project Coordination**
None	
Section 3	**General Public Utilities Design Considerations**
PU 3.1	EROSION AND SEDIMENT CONTROL NOTES
PU 3.2	PIPE BEDDING
PU 3.3	PAYMENT LIMITS TRENCH EXCAVATION AND BACKFILL
PU 3.4	TRENCH WIDTH DETAIL FOR PAYMENT OF CONTINGENT ITEMS
PU 3.5	PIPE CROSSING
PU 3.6	VERTICAL OFFSET WATER AND SANITARY SEWER FACILITIES
PU 3.7	ENCASEMENT
Section 4	**Wastewater Collection – Gravity Sewer**
PU 4.1	STANDARD PRECAST CONCRETE MANHOLE W/ EXTENDED MONOLITHIC BASE
PU 4.2	PRECAST CONCRETE SHALLOW MANHOLE
PU 4.3	SHALLOW BRICK SANITARY SEWER MANHOLE
PU 4.4	SANITARY SEWER STRADDLE MANHOLE
PU 4.5	SPECIAL MANHOLE SHOWING DI SAN. SEWER PASSING THROUGH
PU 4.6	SANITARY SEWER MANHOLE INVERT SHAPING
PU 4.7	CONNECTION INTO EXISTING MANHOLES
PU 4.8	DEEP SANITARY SEWER SERVICE CONNECTION
PU 4.9	SANITARY SEWER INTERIOR DROP CONNECTION
PU 4.10	SANITARY SEWER EXTERIOR DROP MANHOLE
PU 4.11	MANHOLE FRAME
PU 4.12	MANHOLE COVER
PU 4.13	LOCKING MANHOLE COVER AND FRAME
PU 4.14	MANHOLE INSERT
PU 4.15	SANITARY SEWER MANHOLE ADJUSTMENT
PU 4.16	SANITARY SEWER SERVICE CONNECTION
PU 4.17	LATERAL CLEANOUT
Section 5	**Wastewater Collection – Vacuum Sewer**
PU 5.1	TYPICAL TRACER WIRE BOX INSTALLATION
PU 5.2	VACUUM SYSTEM VALVE PIT
PU 5.3	SINGLE FAMILY GRAVITY CONNECTION TO VACUUM VALVE PIT LATERAL WITHOUT DEDICATED AIR INTAKE TERMINAL
PU 5.4	SINGLE FAMILY PRIVATE FORCE MAIN CONNECTION TO VACUUM VALVE PIT
PU 5.5	VACUUM SYSTEM VALVE PIT PLAN VIEW

Section 5 **Wastewater Collection – Vacuum Sewer**
PU 5.6 VACUUM SYSTEM CONNECTION NOTES
PU 5.7 SINGLE FAMILY PRIVATE FORCE MAIN CONNECTION TO VACUUM VALVE PIT WITHOUT DEDICATED AIR INATKE TERMINAL
PU 5.8 FIBERGLASS DUAL BUFFER TANK WITH EXTERNAL BREATHER

Section 6 **Force Mains**
PU 6.1 UTILITY WITNESS POST
PU 6.2 PRIVATE FORCE MAIN CONNECTION
PU 6.3 SINGLE FAMILY PRIVATE FORCE MAIN CONNECTION TO SANITARY SEWER LATERAL
PU 6.4 LOW PRESSURE FORCE MAIN CONNECTION
PU 6.5 LOW PRESSURE FORCE MAIN IN-LINE FLUSHING CHAMBER
PU 6.6 FORCE MAIN SAXOPHONE
PU 6.7 FORCE MAIN CONNECTION TO HRSD FORCE MAIN

Section 7 **Wastewater Pump Stations**
PU 7.1 STANDARD PUMP STATION SITE PLAN SCHEMATIC
PU 7.2 SCHEMATIC SUBMERSIBLE PUMP STATION
PU 7.3 SCHEMATIC WET WELL DRY WELL STATION
PU 7.4 VALVE VAULT DRAIN
PU 7.5 EMERGENCY PUMP CONNECTION (DISCHARGE)
PU 7.6 WATER SERVICE CONFIGURATION
PU 7.7 SUMP PUMP PIPING AND VALVE CONFIGURATION
PU 7.8 VOLUTE VENT PIPING AND VALVE CONFIGURATION
PU 7.9 BAR SCREEN
PU 7.10 ANTI-VORTEX CONE
PU 7.11 SHADOWBOX FENCE
PU 7.12 FENCE GATE
PU 7.13 GENERATOR ENCLOSURE PAD
PU 7.14 QUICK-CONNECT BOX
PU 7.15 THRU-WALL ACCESS
PU 7.16 ANTENNA MAST SYSTEM
PU 7.17 STILLING WELL - DUAL 2 INCH
PU 7.18 STILLING WELL - DUAL 4 INCH
PU 7.19 PRESSURE SENSOR ASSEMBLY
PU 7.20 EXTERIOR JUNCTION BOX DETAIL
PU 7.21 CONFINED SPACE SIGN
PU 7.22 GRAB BAR
PU 7.23 WET WELL LADDER
PU 7.24 3 INCH FLUSH FLOOR ADAPTER BASE
PU 7.25 SELF-CLOSING GATE
PU 7.26 REMOVABLE ANCHOR POST
PU 7.27 GUARD
PU 7.28 WALL SECTION
PU 7.29 BOND BEAM AND DENTIL TRIM
PU 7.30 STANDARD CONDUIT WIRING SCHEDULE

Section 8 **Water Distribution and Transmission Systems**
PU 8.1 WATER SERVICE LINE INSTALLATION
PU 8.2 5/8" AND 1" WATER METER BOX SETTING
PU 8.3 5/8" AND 1" METER BOX
PU 8.4 DETECTOR CHECK AND DOMESTIC METER LAYOUT
PU 8.5 COMBINATION METER ASSEMBLY 10" AND SMALLER
PU 8.6 VALVE BOX
PU 8.7 VALVE STEM EXTENSION
PU 8.8 FIRE HYDRANT SETTING
PU 8.9 FIRE HYDRANT CONNECTIONS
PU 8.10 MANUAL AIR VENT/BLOW OFF ASSEMBLY
PU 8.11 WATER SAMPLING STATION

Section 9 **Water Pumping and Storage Facilities**
PU 9.1 WATERSTOP
PU 9.2 SECURITY FENCE
PU 9.3 SWING ENTRANCE GATE

EROSION AND SEDIMENT CONTROL

I. GENERAL NOTES

A. EROSION CONTROL AND TREE PROTECTION

1. THE CONTRACTOR WILL COMPLY WITH APPLICABLE REGULATIONS OF THE CITY OF VIRGINIA BEACH EROSION AND SEDIMENT CONTROL ORDINANCE, THE CURRENT VIRGINIA EROSION AND SEDIMENT CONTROL LAW AND REGULATIONS (VESCLR) AND THE "VIRGINIA EROSION AND SEDIMENT CONTROL HANDBOOK (VESCH), AS AMENDED, ISSUED BY THE VIRGINIA DEPARTMENT OF CONSERVATION AND RECREATION, DIVISION OF SOIL AND WATER CONSERVATION FOR ALL EROSION AND SEDIMENT CONTROL PRACTICES, MATERIALS AND STANDARDS. THE APPROVAL OF THIS PLAN DOES NOT RELIEVE THE CONTRACTOR OF CONTROLLING EROSION AND SILTATION AND PROVIDING ADDITIONAL MEASURES TO REASONABLY CONTROL PROBLEM AREAS WHICH MAY ARISE DURING CONSTRUCTION.
2. UNLESS OTHERWISE INDICATED, ALL VEGETATIVE AND STRUCTURAL EROSION AND SEDIMENT CONTROL PRACTICES SHALL BE CONSTRUCTED AND MAINTAINED ACCORDING TO MINIMUM STANDARDS OF THE VESCH AND SHALL BE ADHERED TO UNLESS OTHERWISE WAIVED OR APPROVED BY A VARIANCE BY THE OWNER.
3. THE OWNER SHALL HAVE THE AUTHORITY TO DIRECTLY CHANGE, ADD OR DELETE EROSION AND SEDIMENT CONTROL DEVICES AS NEEDED IN THE FIELD, AS SITE CONDITIONS WARRANT. THE CONTRACTOR SHOULD NOT REMOVE THE EROSION AND SEDIMENT CONTROL WITHOUT PRIOR APPROVAL FROM THE OWNER.
4. THE CONTRACTOR SHALL CONFORM TO MODIFIED SILTATION/EROSION CONTROLS AS REQUIRED BY THE OWNER TO INCREASE EFFICIENCY OF THE SEDIMENT CONTROL PLAN. EROSION AND SEDIMENT CONTROL MEASURES ARE TO BE PROVIDED PRIOR TO BEGINNING LAND DISTURBING ACTIVITIES.
5. THE SEQUENCE OF CONSTRUCTION WILL BE ENFORCED BY THE CONTRACTOR'S RESPONSIBLE LAND DISTURBER (RLD) FOR THE PROJECT WHO WILL BE RESPONSIBLE FOR CARRYING OUT THE PLAN. THIS INDIVIDUAL WILL REPRESENT THE PERMIT APPLICANT AND HOLD A RLD CERTIFICATE, WILL BE IN CHARGE OF AND RESPONSIBLE FOR CARRYING OUT THE REGULATED "LAND-DISTURBING ACTIVITY".
6. THE CONTRACTOR SHALL NOT ATTACH (NAIL, WRAP, ETC.) NON-PROTECTIVE BOARDS OR WIRES ONTO TREES DURING CONSTRUCTION. THE CONTRACTOR WILL CAUTION THE HEAVY EQUIPMENT OPERATOR'S TO OPERATE CAREFULLY AROUND TREES TO AVOID DAMAGE TO EXISTING TREE TRUNKS AND ROOTS DURING LAND LEVELING OPERATIONS.
7. THE CONTRACTOR SHALL NOT STORE CONSTRUCTION EQUIPMENT OR MATERIALS UNDER EXISTING TREES. SOIL COMPACTION AROUND TREES WILL BE AVOIDED.
8. THE CONTRACTOR WILL NOT CUT FEEDER ROOTS WITHIN AN AREA EQUAL TO TWICE THE TREE CIRCUMFERENCE (MEASURED IN INCHES AT 4.5 FEET ABOVE GROUND) CONVERTED TO FEET. (EXAMPLE: CIRCUMFERENCE OF 1O INCHES WOULD HAVE A "NO CUT ZONE" OF 20 FEET IN ALL DIRECTIONS FROM THE TREE).
9. THE CONTRACTOR WILL TREAT TREE TRUNKS AND EXPOSED ROOTS DAMAGED DURING EQUIPMENT OPERATIONS IN ACCORDANCE WITH ARBORICULTURAL STANDARDS. CUT BACK DAMAGED TREE LIMBS TO THE NEXT LATERAL BRANCH OR PARENT STEM AT THE BRANCH COLLAR AND CONTACT THE OWNER'S ARBORIST FOR CARE OF SEVERELY INJURED TREES. THE CONTRACTOR SHALL REMOVE ALL DAMAGED TREE LIMBS AS SOON AS POSSIBLE.
10. IF TREES PROTECTED BY THE ABOVE MEANS ARE DAMAGED DURING CONSTRUCTION, THE CONTRACTOR WILL REPLACE THEM WITH TREES OF AT LEAST 2 INCH CALIPER OF THE SAME SPECIES WITH THE QUALITY AS SPECIFIED BY THE OWNER'S ARBORIST AT THE CONTRACTOR'S EXPENSE. REPLACEMENT TREES WILL CONFORM TO THE LATEST EDITION OF THE AMERICAN STANDARD FOR NURSERY STOCK.
11. THE CONTRACTOR WILL ONLY STOCKPILE MATERIALS WITHIN AREAS DESIGNATED ON THE PLANS OR AS DIRECTED BY THE OWNER.
12. THE CONTRACTOR WILL LEAVE EROSION CONTROL DEVICES IN PLACE UNTIL ALL DISTURBED AREAS ARE PERMANENTLY STABILIZED TO THE SATISFACTION OF THE OWNER'S REPRESENTATIVE. AFTER PERMANENT STABILIZATION, CONTRACTOR IS TO REMOVE APPROPRIATE EROSION AND SEDIMENT CONTROLS AS APPROVED BY THE OWNER.
13. EROSION CONTROL DEVICES SHOWN BY THE PLAN ARE THE MINIMUM NECESSARY TO FULFILL REQUIREMENTS OR APPLICABLE REGULATIONS.
14. THE CONTRACTOR WILL CONSTRUCT AND MAINTAIN SUFFICIENT DEVICES TO PREVENT SOIL ERODING ONTO ADJACENT STREETS, AND INTO DRAINAGE SYSTEMS AND WATER COURSES.
15. THE CONTRACTOR WILL INSTALL DEVICES TO PROTECT EXISTING STORM DRAINAGE SYSTEMS IN CONJUNCTION WITH SEEDING AND STABILIZATION, AS NECESSARY.
16. THE CONTRACTOR WILL CONTROL AND MONITOR DUST RESULTING FROM CONSTRUCTION. PROVISIONS MAY INCLUDE, BUT ARE NOT LIMITED TO, USE OF WATER OR CHEMICAL DUST PALLIATIVES, LIMITING THE NUMBER OF VEHICLES ALLOWED ON-SITE, AND MINIMIZING THE OPERATING SPEED OF ALL VEHICLES.

B. MAINTENANCE

1. ALL TEMPORARY AND PERMANENT EROSION AND SEDIMENT CONTROL PRACTICES MUST BE MAINTAINED AND REPAIRED AS NEEDED TO ASSURE CONTINUED PERFORMANCE OF THEIR INTENDED FUNCTION.
2. ALL EROSION AND SEDIMENT CONTROL MEASURES WILL BE CHECKED DAILY AND AFTER EACH SIGNIFICENT RAINFALL BY THE CONTRACTOR OR THE APPROPRIATE REPRESENTATIVE, AND REPAIRED BY THE END OF THE DAY AND IN ACCORDANCE WITH ALL PERMIT REQUIREMENTS.
3. THE CONTRACTOR WILL CLEAN THE EROSION CONTROL DEVICES OF MUD, DEBRIS, AND ERODED MATERIALS DURING CONSTRUCTION AND MAINTAIN ALL EROSION CONTROL DEVICES ON A DAILY BASIS OR AS REQUIRED BY THE OWNER.
4. THE SILT FENCE BARRIER WILL BE CHECKED REGULARLY FOR UNDERMINING OR DETERIORATION OF THE FABRIC AND/OR POSTS. SEDIMENT SHALL BE REMOVED WHEN THE LEVEL OF SEDIMENT DEPOSITION REACHES HALF WAY TO THE TOP OF THE BARRIER.
5. THE INLET PROTECTION DEVICES WILL BE CHECKED REGULARLY FOR SEDIMENT BUILDUP, WHICH WILL PREVENT DRAINAGE. IF THE INLET PROTECTION DEVICES ARE CLOGGED BY SEDIMENT, THEY SHALL BE REMOVED AND CLEANED OR REPLACED.
6. THE SEEDED AREAS SHALL BE CHECKED REGULARLY TO ENSURE THAT A GOOD STAND OF VEGETATION IS MAINTAINED. AS NEEDED, SEEDED AREAS SHALL BE FERTILIZED AND RESEEDED.
7. THE TEMPORARY CONSTRUCTION ENTRANCE SHALL BE MAINTAINED IN A CONDITION WHICH WILL PREVENT TRACKING OR FLOW OF MUD ONTO PUBLIC RIGHTS-OF-WAY. ALL MATERIAL TRACKED ONTO A PUBLIC OR PRIVATE ROAD SURFACE SHALL BE CLEANED THOROUGHLY AT THE END OF EACH DAY. SEDIMENT SHALL BE REMOVED FROM ROADS BY SHOVELING OR SWEEPING AND BE TRANSPORTED TO A SEDIMENT CONTROLLED DISPOSAL AREA.
8. THE TEMPORARY SEDIMENT TRAP SHALL BE CHECKED REGULARLY TO ENSURE THAT IT IS STRUCTURALLY SOUND AND HAS NOT BEEN DAMAGED BY EROSION OR CONSTRUCTION EQUIPMENT. THE HEIGHT OF THE STONE OUTLET SHALL BE CHECKED TO ENSURE THAT ITS CENTER IS AT LEAST 1 FOOT BELOW THE TOP OF THE EMBANKMENT. THE SEDIMENT SHALL BE REMOVED AND THE TRAP RESTORED TO ITS ORIGINAL DIMENSIONS WHEN THE SEDIMENT HAS ACCUMULATED TO½ THE DESIGN VOLUME OF THE WET STORAGE. SEDIMENT REMOVAL FROM THE BASIN SHALL BE DEPOSITED IN A SUITABLE AREA AND IN SUCH A MANNER THAT IT WILL NOT ERODE AND CAUSE SEDIMENTATION PROBLEMS. STONE CHOCKED WITH SEDIMENT SHALL BE REMOVED AND CLEANED OR REPLACED.

C. MINIMUM STANDARDS AND LAND CONSERVATION NOTES

1. THE CONTRACTOR WILL INSTALL TEMPORARY SEEDING OR STABILIZATION IMMEDIATELY AFTER ANY SOIL DISTURBANCE.
2. THE CONTRACTOR WILL STABILIZE WITH PERMANENT SEEDING IMMEDIATELY FOLLOWING FINISH GRADING ON ALL DISTURBED AREAS. IN ALL SEEDING OPERATIONS, SEED, FERTILIZER AND LIME WILL BE APPLIED PRIOR TO MULCHING.
3. PERMANENT OR TEMPORARY STABILIZATION SHALL BE APPLIED TO DENUDED AREAS WITHIN SEVEN (7) DAYS AFTER FINAL GRADE IS REACHED ON ANY PORTION OF THE SITE UNLESS THE PLANS OR SPECIFICATIONS INDICATE SOONER.
4. TEMPORARY SOIL STABILIZATION SHALL BE APPLIED WITHIN SEVEN (7) DAYS TO DENUDED AREAS THAT MAY NOT BE AT FINAL GRADE BUT WILL REMAIN DORMANT FOR LONGER THAN FOURTEEN (14) DAYS, BUT LESS THAN ONE (1) YEAR UNLESS THE PLANS OR SPECIFICATIONS INDICATE SOONER.
5. PERMANENT STABILIZATION SHALL BE APPLIED TO AREAS THAT ARE TO BE LEFT DORMANT FOR MORE THAN ONE (1) YEAR.
6. ALL SILTATION CONTROLS SHALL BE PLACED AT THE LIMITS OF CONSTRUCTION AND NOT IN WOODED AREAS TO REMAIN UNDISTURBED. AREAS THAT ARE NOT TO BE DISTURBED SHALL BE CLEARLY MARKED BY FLAGS.
7. ANY STOCKPILED MATERIAL WHICH WILL REMAIN IN PLACE LONGER THAN SEVEN (7) DAYS SHALL BE SEEDED AND MULCHED. WHEN SOIL IS PLACED ON THE DOWNHILL SIDE OF THE TRENCH, IT SHALL BE BACKSLOPED TO DRAIN TOWARD THE TRENCH. WHEN NECESSARY TO DEWATER THE TRENCH, THE PUMP DISCHARGE HOSE SHALL DISCHARGE VIA SEDIMENT TRAPPING DEVICES IN A STABILIZED AREA.
8. DURING CONSTRUCTION, SOIL STOCKPILES AND BORROW AREAS SHALL BE STABILIZED OR PROTECTED WITH SEDIMENT TRAPPING MEASURES. TEMPORARY PROTECTION AND PERMANENT STABILIZATION SHALL BE APPLIED TO ALL SOIL STOCKPILES ONSITE AND BORROW AREAS OR SOIL INTENTIONALLY TRANSFERRED OFFSITE.
9. PERMANENT VEGETATIVE COVER SHALL BE ESTABLISHED ON DENUDED AREAS NOT OTHERWISE PERMANENTLY STABILIZED. PERMANENT VEGETATION SHALL NOT BE CONSIDERED ESTABLISHED UNTIL A GROUND COVER IS ACHIEVED THAT IS:
   - A. UNIFORM
   - B. MATURE ENOUGH TO SURVIVE
   - C. WILL INHIBIT EROSION
10. SEDIMENT BASINS, SEDIMENT TRAPS, PERIMETER DIKES, SEDIMENT BARRIERS AND OTHER MEASURES INTENDED TO TRAP SEDIMENT SHALL BE CONSTRUCTED AS A FIRST STEP IN ANY LAND-DISTURBING ACTIVITY AND SHALL BE MADE FUNCTIONAL BEFORE UPSLOPE LAND DISTURBANCE TAKES PLACE.
11. SEDIMENT TRAPS AND SEDIMENT BASINS SHALL BE DESIGNED AND CONSTRUCTED BASED UPON THE TOTAL DRAINAGE AREA TO BE SERVED BY THE TRAP OR BASIN.
12. SEDIMENT TRAPS SHALL BE DESIGNED FOR A CONTROLLED DRAINAGE AREA LESS THAN THREE (3) ACRES AND A MINIMUM STORAGE CAPACITY OF 134 C.Y./ACRES OF DRAINAGE AREA.
13. SEDIMENT BASINS SHALL BE DESIGNED FOR A CONTROLLED DRAINAGE AREA THREE (3) ACRES OR GREATER, AND MINIMUM STORAGE CAPACITY OF 134 C.Y./ACRES OF DRAINAGE AREA. THE OUTFALL SYSTEM FOR SEDIMENT BASIN SHALL AT A MINIMUM MAINTAIN THE STRUCTURAL INTEGRITY OF THE BASIN DURING A TWENTY FIVE (25) YEAR STORM OF 24-HOUR DURATION.
14. CUT AND FILL SLOPES THAT ARE FOUND TO BE ERODING EXCESSIVELY WITHIN ONE (1) YEAR OF PERMANENT STABILIZATION SHALL BE PROVIDED WITH ADDITIONAL SLOPE STABILIZATION MEASURES UNTIL THE PROBLEM IS CORRECTED.
15. CONCENTRATED RUNOFF SHALL NOT FLOW DOWN CUT OR FILL SLOPES UNLESS CONTAINED WITHIN AN ADEQUATE TEMPORARY OR PERMANENT CHANNEL, FLUME, OR SLOPE DRAIN STRUCTURES.
16. WHENEVER WATER SEEPS FROM A SLOPE FACE, ADEQUATE DRAINAGE OR OTHER PROTECTION SHALL BE PROVIDED.
17. ALL STORM DRAINAGE INLETS MADE OPERABLE DURING CONSTRUCTION SHALL BE PROTECTED SO THAT SEDIMENT-LADEN WATER CANNOT ENTER THE STORMWATER CONVEYANCE SYSTEM WITHOUT FIRST BEING FILTERED/TREATED TO REMOVE SEDIMENT.
18. BEFORE NEWLY CONSTRUCTED STORMWATER CONVEYANCE CHANNELS OR PIPES ARE MADE OPERATIONAL, ADEQUATE OUTLET PROTECTION AND ANY REQUIRED TEMPORARY OR PERMANENT CHANNEL LINING SHALL BE INSTALLED IN BOTH THE CONVEYANCE CHANNEL AND THE RECEIVING CHANNEL.
19. WHEN WORK IN A LIVE WATERCOURSE IS PERFORMED
   - A. PRECAUTIONS SHALL BE TAKEN TO MINIMIZE ENCROACHMENT, CONTROL SEDIMENT TRANSPORT, AND STABILIZE THE WORK AREA TO THE GREATEST EXTENT POSSIBLE DURING CONSTRUCTION AND AS DIRECTED BY THE OWNER.
   - B. NONERODIBLE MATERIAL SHALL BE USED FOR THE CONSTRUCTION OF CAUSEWAYS AND COFFERDAMS.
   - C. EARTHEN FILL MAY BE USED FOR THESE STRUCTURES IF ARMORED BY NONERODIBLE COVER MATERIALS.
20. ALL APPLICABLE FEDERAL, STATE AND LOCAL REGULATIONS PERTAINING TO WORKING IN OR CROSSING LIVE WATERCOURSES SHALL BE MET.
21. THE BED AND BANKS OF A WATERCOURSE SHALL BE STABILIZED IMMEDIATELY AFTER WORK IN THE WATERCOURSE IS COMPLETED AND AS DIRECTED BY THE OWNER.
22. UNDERGROUND UTILITY LINES SHALL BE INSTALLED IN ACCORDANCE WITH THE FOLLOWING STANDARDS IN ADDITION TO OTHER APPLICABLE CRITERIA:
   - A. NO MORE THAN 500 LINEAR FEET OF TRENCH MAY BE OPENED AT ONE TIME
   - B. EXCAVATED MATERIAL SHALL BE PLACED ON THE UPHILL SIDE OF TRENCHES
   - C. EFFLUENT FROM DEWATERING OPERATIONS SHALL BE FILTERED OR PASSED THROUGH APPROVED SEDIMENT TRAPPING DEVICES, OR BOTH, AND DISCHARGED IN A MANNER THAT DOES NOT ADVERSELY AFFECT FLOWING STREAMS OR OFF-SITE PROPERTY.
   - D. MATERIAL USED FOR BACKFILLING TRENCHES SHALL BE PROPERLY COMPACTED IN ORDER TO MINIMIZE EROSION AND PROMOTE STABILIZATION
   - E. DESTABILIZATION SHALL BE ACCOMPLISHED IN ACCORDANCE WITH THESE REGULATIONS
   - F. COMPLY WITH APPLICABLE SAFETY REGULATIONS.
23. ALL TEMPORARY EROSION AND SEDIMENT CONTROL MEASURES SHALL BE REMOVED WITHIN 30 DAYS AFTER FINAL SITE STABILIZATION OR AFTER THE TEMPORARY MEASURES ARE NO LONGER NEEDED, UNLESS OTHERWISE AUTHORIZED BY THE OWNER. TRAPPED SEDIMENT AND THE DISTURBED SOIL AREAS RESULTING FROM THE DISPOSITION OF TEMPORARY MEASURES SHALL BE PERMANENTLY STABILIZED TO PREVENT FURTHER EROSION AND SEDIMENTATION.

II VESCH MINIMUM STANDARDS (MS-19)

THIS SECTION PRESENTS THE GUIDELINES & IDENTIFIED IN CHAPTER 6 OF THE VIRGINIA EROSION & SEDIMENT CONTROL HANDBOOK. ALL APPLICABLE MINIMUM STANDARDS (FROM THE VIRGINIA EROSION & SEDIMENT CONTROL REGULATION, MS-1-MS-19) MUST BE ADDRESSED

REQUIREMENT	ACTION
1. PERMANENT OR TEMPORARY SOIL STABILIZATION SHALL BE APPLIED TO DENUDED AREAS WITHIN SEVEN DAYS AFTER FINAL GRADE IS REACHED ON ANY PORTION OF THE SITE. TEMPORARY SOIL STABILIZATION SHALL BE APPLIED WITHIN SEVEN DAYS TO DENUDED AREAS THAT MAY NOT BE A FINAL GRADE BUT WILL REMAIN DORMANT FOR LONGER THAN 14 DAYS. PERMANENT STABILIZATION SHALL BE APPLIED TO AREAS THAT ARE TO BE LEFT DORMANT FOR MORE THAN ONE YEAR.	
2. DURING CONSTRUCTION OF THE PROJECT, SOIL STOCKPILES AND BORROW AREAS SHALL BE STABILIZED OR PROTECTED WITH SEDIMENT TRAPPING MEASURES. TEMPORARY PROTECTION AND PERMANENT STABILIZATION SHALL BE APPLIED TO ALL SOIL STOCKPILES ON SITE AND BORROW AREAS OR SOIL INTENTIONALLY TRANSFERRED OFF SITE.	
3. PERMANENT VEGETATIVE COVER SHALL BE ESTABLISHED ON DENUDED AREAS NOT OTHERWISE PERMANENTLY STABILIZED. PERMANENT VEGETATION SHALL NOT BE CONSIDERED ESTABLISHED UNTIL A GROUND COVER IS ACHIEVED THAT IS UNIFORM, MATURE ENOUGH TO SURVIVE AND WILL INHIBIT EROSION.	
4. SEDIMENT BASINS AND TRAPS, PERIMETER DIKES, SEDIMENT BARRIERS AND OTHER MEASURES INTENDED TO TRAP SEDIMENT SHALL BE CONSTRUCTED AS A FIRST STEP IN ANY LAND-DISTURBING ACTIVITY AND SHALL BE MADE FUNCTIONAL BEFORE UPSLOPE LAND DISTURBANCE TAKES PLACE.	
5. STABILIZATION MEASURES SHALL BE APPLIED TO EARTHEN STRUCTURES SUCH AS DAMS, DIKES AND DIVERSIONS IMMEDIATELY AFTER INSTALLATION.	
6. SEDIMENT TRAPS AND SEDIMENT BASINS SHALL BE DESIGNED AND CONSTRUCTED BASED UPON THE TOTAL DRAINAGE AREA TO BE SERVED BY THE TRAP OR BASIN. SEDIMENT TRAPS SHALL BE CONSTRUCTED TO CONTROL DRAINAGE AREAS LESS THAN THREE ACRES WITH MINIMUM STORAGE CAPACITY OF 134 CUBIC YARDS/ACRE OF DRAINAGE AREA. SEDIMENT BASINS SHALL BE CONSTRUCTED TO CONTROL DRAINAGE AREAS GREATER THAN THREE ACRES WITH MINIMUM STORAGE CAPACITY OF 134 CUBIC YARDS/ACRE OF DRAINAGE AREA. THE OUTFALL SYSTEM SHALL AT A MINIMUM MAINTAIN THE STRUCTURAL INTEGRITY OF THE BASIN DURING A 25 YEAR STORM OF 24 HOUR DURATION.	
7. CUT AND FILL SLOPES SHALL BE DESIGNED AND CONSTRUCTED IN A MANNER THAT WILL MINIMIZE EROSION. SLOPES THAT ARE FOUND TO BE ERODING EXCESSIVELY WITHIN ONE YEAR OF PERMANENT STABILIZATION SHALL BE PROVIDED WITH ADDITIONAL SLOPE STABILIZING MEASURES UNTIL THE PROBLEM IS CORRECTED.	
8. CONCENTRATED RUNOFF SHALL NOT FLOW DOWN CUT OR FILL SLOPES UNLESS CONTAINED WITHIN AN ADEQUATE TEMPORARY OR PERMANENT CHANNEL, FLUME OR SLOPE DRAIN STRUCTURE.	
9. WHENEVER WATER SEEPS FROM A SLOPE FACE, ADEQUATE DRAINAGE OR OTHER PROTECTION SHALL BE PROVIDED.	
10. ALL STORM SEWER INLETS THAT ARE MADE OPERABLE DURING CONSTRUCTION SHALL BE PROTECTED SO THAT SEDIMENT-LADEN WATER CANNOT ENTER THE CONVEYANCE SYSTEM WITHOUT FIRST BEING FILTERED OR OTHERWISE TREATED TO REMOVE SEDIMENT.	
11. BEFORE NEWLY CONSTRUCTED STORMWATER CONVEYANCE CHANNELS OR PIPES ARE MADE OPERATIONAL, ADEQUATE OUTLET PROTECTION AND ANY REQUIRED TEMPORARY OR PERMANENT CHANNEL LINING SHALL BE INSTALLED IN BOTH THE CONVEYANCE CHANNEL AND RECEIVING CHANNEL.	
12. WHEN WORK IN A LIVE WATERCOURSE IS PERFORMED, PRECAUTIONS SHALL BE TAKEN TO MINIMIZE ENCROACHMENT, CONTROL SEDIMENT TRANSPORT AND STABILIZE THE WORK AREA TO THE GREATEST EXTENT POSSIBLE DURING CONSTRUCTION. NON-ERODIBLE MATERIAL SHALL BE USED FOR THE CONSTRUCTION OF CAUSEWAYS AND COFFERDAMS. EARTHEN FILL MAY BE USED FOR THESES STRUCTURES IF ARMORED BY NON-ERODIBLE COVER MATERIALS.	
13. WHEN A LIVE WATERCOURSE MUST BE CROSSED BY CONSTRUCTION VEHICLES MORE THAN TWICE IN ANY SIX-MONTH PERIOD, A TEMPORARY VEHICULAR STREAM CROSSING CONSTRUCTED OF NON-ERODIBLE MATERIAL SHALL BE PROVIDED.	
14. ALL APPLICABLE FEDERAL, STATE, AND LOCAL REGULATIONS PERTAINING TO WORKING IN OR CROSSING LIVE WATERCOURSES SHALL BE MET.	
15. THE BED AND BANKS OF A WATERCOURSE SHALL BE STABILIZED IMMEDIATELY AFTER WORK IN THE WATERCOURSE IS COMPLETED.	
16. UNDERGROUND UTILITY LINES SHALL BE INSTALLED IN ACCORDANCE WITH THE FOLLOWING STANDARDS IN ADDITION TO OTHER APPLICABLE CRITERIA:	
a. NO MORE THAN 500 LINEAR FEET OF TRENCH MAY BE OPENED AT ONE TIME.	
b. EXCAVATED MATERIAL SHALL BE PLACED ON THE UPHILL SIDE OF TRENCHES.	
c. EFFLUENT FROM DEWATERING OPERATIONS SHALL BE FILTERED OR PASSED THROUGH AN APPROVED SEDIMENT TRAPPING DEVICE, OR BOTH, AND DISCHARGED IN A MANNER THAT DOES NOT ADVERSELY AFFECT FLOWING STREAMS OR OFF-SITE PROPERTY.	
d. MATERIAL USED FOR BACKFILLING TRENCHES SHALL BE PROPERLY COMPACTED IN ORDER TO MINIMIZE EROSION AND PROMOTE STABILIZATION.	
e. RE-STABILIZATION SHALL BE ACCOMPLISHED IN ACCORDANCE WITH THESE REGULATIONS.	
f. APPLICABLE SAFETY REGULATIONS SHALL BE COMPLIED WITH.	
17. WHERE CONSTRUCTION VEHICLE ACCESS ROUTES INTERSECT PAVED OR PUBLIC ROADS, PROVISIONS SHALL BE MADE TO MINIMIZE THE TRANSPORT OF SEDIMENT BY VEHICULAR TRACKING ONTO THE PAVED SURFACE. WHERE SEDIMENT IS TRANSPORTED ONTO A PAVED OR PUBLIC ROAD SURFACE, THE ROAD SURFACE SHALL BE CLEANED THOROUGHLY AT THE END OF THE DAY. SEDIMENT SHALL BE REMOVED FROM THE ROADS BY SHOVELING OR SWEEPING AND TRANSPORTED TO A SEDIMENT CONTROL DISPOSAL AREA. STREET WASHING SHALL BE ALLOWED ONLY AFTER SEDIMENT IS REMOVED IN THIS MANNER. THIS PROVISION SHALL APPLY TO INDIVIDUAL DEVELOPMENT LOTS AS WELL AS TO LARGER LAND-DISTURBING ACTIVITIES.	
18. ALL TEMPORARY EROSION AND SEDIMENT CONTROL MEASURES SHALL BE REMOVED WITHIN 30 DAYS AFTER FINAL SITE STABILIZATION OR AFTER THE TEMPORARY MEASURES ARE NO LONGER NEEDED, UNLESS OTHERWISE AUTHORIZED BY THE LOCAL PROGRAM AUTHORITY. TRAPPED SEDIMENT AND THE DISTURBED SOIL AREAS RESULTING FROM THE DISPOSITION OF TEMPORARY MEASURES SHALL BE PERMANENTLY STABILIZED TO PREVENT FURTHER EROSION AND SEDIMENTATION.	
19. PROPERTIES AND WATERWAYS DOWNSTREAM FROM DEVELOPMENT SITES SHALL BE PROTECTED FROM THE SEDIMENT DEPOSITION, EROSION AND DAMAGE DUE TO INCREASES IN VOLUME, VELOCITY AND PEAK FLOW RATE OF STORMWATER RUNOFF FOR THE STATED FREQUENCY STORM OF 24-HOUR DURATION IN ACCORDANCE WITH THE FOLLOWING STANDARDS AND CRITERIA. CONCENTRATED STORMWATER RUNOFF LEAVING A DEVELOPMENT SITE SHALL BE DISCHARGED DIRECTLY INTO ADEQUATE NATURAL OR MAN-MADE RECEIVING CHANNEL, PIPE, OR STORM SEWER SYSTEM. FOR THOSE SITES, DOWNSTREAM STABILITY ANALYSES AT THE OUTFALL OF THE PIPE OR PIPE SYSTEM SHALL BE PERFORMED.	

III NARRATIVE AND MANAGEMENT STRATEGIES

A. SITE INFORMATION

1. LOCATION:
   A LOCATION OR ADDRESS OF THE SITE IN THE CITY OF VIRGINIA BEACH.
2. PROJECT DESCRIPTION:
   A DESCRIPTION OF THE NATURE AND PURPOSE OF THE LAND-DISTURBING ACTIVITY AND THE DISTURBED AREA IN ACRES.
3. EXISTING SITE CONDITIONS:
   A DESCRIPTION OF THE EXISTING TOPOGRAPHY, VEGETATION AND DRAINAGE/DRAINAGE SYSTEM.
4. ADJACENT AREAS:
   A DESCRIPTION OF NEIGHBORING AREAS SUCH AS STREAMS, LAKES, RESIDENTIAL AREAS, ROADS, ETC., WHICH MIGHT BE AFFECTED BY THE LAND DISTURBANCES.
5. OFF-SITE AREAS:
   DESCRIPTIONS OF ANY OFF-SITE LAND DISTURBING ACTIVITIES THAT MAY OCCUR AT BORROW SITES, STOCKPILES AND ANY OTHER DISTURBED AREA.
6. SOILS:
   USING TO THE "UNITED STATES DEPARTMENT OF AGRICULTURE, SOIL CONSERVATIONSERVICE SOIL SURVEY OF THE CITY OF VIRGINIA BEACH, VIRGINIA," A DESCRIPTION OF THE SOIL ON SITE INCLUDING SOIL NAME, MAP SYMBOL, USDA TEXTURE, DEPTH, PERMEABILITY, UNIFIED AND AASHTO CLASSIFICATIONS.
7. CRITICAL EROSION AREAS:
   A DESCRIPTION OF AREAS ON THE SITE WHICH HAVE POTENTIALLY SERIOUS EROSION PROBLEMS.
8. EROSION AND SEDIMENT CONTROL MEASURES:
   A DESCRIPTION OF METHODS WHICH WILL BE USED TO CONTROL AND SEDIMENTATION ON THE SITE.
9. PERMANENT STABILIZATION:
   A DESCRIPTION, INCLUDING REFERENCING THE SEED TABLE OR SPECIFICATIONS, OF HOW THE SITE WILL BE STABILIZED AFTER CONSTRUCTION IS COMPLETED.
10. STORMWATER RUNOFF CONSIDERATIONS:
    A DESCRIPTION OF ANY INCREASE IN PEAK RUNOFF RATES FROM THE DEVELOPED SITE, ANY INCREASE IN RUNOFF CAUSING FLOODING AND CHANNEL DEGRADATION DOWNSTREAM AND THE STRATEGY USED TO CONTROL STORMWATER RUNOFF. (EXAMPLE. THE EXISTING DOWNSTREAM REGIONAL BMP AT {NAME OF LAKE OR LOCAL/ON OF BMP) WILL PROVIDE BOTH WATER QUALITY AND QUANTITY TREATMENT FOR THE SITE. THE REGIONAL BMP PROVIDES STORM 'ACER QUALITY TREATMENT IN ACCORDANCE WITH THE VIRGINIA STORMWATER MANAGEMENT HANDBOOK PERFORMANCE BASED CALCULATIONS).
11. CALCULATIONS:
    PROVIDE DETAILED CALCULATIONS FOR THE DESIGN OF TEMPORARY SEDIMENT BASIN, PERMANENT STORMWATER DETENTION BASINS, DIVERSIONS, CHANNELS, ETC. INCLUDING CALCULATION FOR PRE- AND POST-DEVELOPMENT RUNOFF. (EXAMPLE. DETAILED STORMWATER MANAGEMENT CALCULATIONS AS WELL AS THE STORM SEWER CALCULATIONS ARE INCLUDED IN THE DRAINAGE REPORT SUBMITTED FOR THIS PROJECT.
12. MAINTENANCE:
    A SCHEDULE SHOULD BE PROVIDED OF REGULAR INSPECTIONS AND REPAIRS OF EROSION AND SEDIMENT CONTROL STRUCTURES.

B. SEQUENCING OF CONSTRUCTION

THE FOLLOWING EXAMPLE IS A NARRATIVE OF THE CONTRACTOR OBLIGATIONS UNDER THE APPROVED PERMIT FOR EACH PHASE OF CONSTRUCTION.

1. THE CONTRACTOR SHALL OBTAIN ALL NECESSARY APPROVALS FROM THE CITY OF VIRGINIA BEACH PRIOR TO IMPLEMENTING THIS EROSION AND SEDIMENT CONTROL PLAN.
2. THE CONTRACTOR MUST CONTACT OWNER FOR A PRECONSTRUCTION MEETING AT LEAST 48 HOURS BEFORE ANY CONSTRUCTION ACTIVITY BEGINS.
3. PRIOR TO GRADING, THE CONTRACTOR SHOULD INSTALL AND MAINTAIN ALL EROSION AND SEDIMENT CONTROL MEASURES AS INDICATED ON THESE PLANS.
4. THE CONTRACTOR SHALL AVOID ANY DISTURBANCE TO EXISTING WETLANDS. NO EQUIPMENT SHALL BE OPERATING BEYOND THE LIMITS OF DISTURBANCE UNLESS APPROVED BY THE OWNER.
5. SEDIMENT TRAPPING MEASURES SHALL BE INSTALLED AS A FIRST STEP IN GRADING AND SHALL BE SEEDED AND MATCHED IMMEDIATELY FOLLOWING INSTALLATION.
6. TEMPORARY SEEDING OR OTHER STABILIZATION SHALL FOLLOW IMMEDIATELY AFTER ROUGH GRADING.
7. DEVELOPMENT OF THIS PROJECT SHALL INCLUDE THE FOLLOWING.
   - a. SILT FENCE AND INLET PROTECTION TO BE INSTALLED AS SHOWN.
   - b. INSTALL DRAINAGE SYSTEM AND MAINTAIN EROSION CONTROL PRACTICES.
   - c. DEMOLITION AND REMOVAL OF EXISTING STRUCTURES AND PAVEMENT.
   - d. ROUGH GRADING OF THE PROJECT.
   - e. INSTALL BASE STONE, CURBING AND GUTTER AND ASPHALT PAVEMENT.
   - f. SEED AREAS NOT TO BE PAVED.
8. WITHIN THIRTY (30) DAYS A/FEE ACHIEVING ADEQUATE STABILIZATION, THE TEMPORARY EROSION AND SEDIMENT CONTROLS SHALL BE CLEANED UP AND REMOVED.

C. THE SWPPP WILL BE KEPT ON SITE WITH ALL ASSOCIATED DOCUMENTATION.

THESE PLANS HAVE BEEN CHECKED TO ENSURE INCLUSION OF EROSION AND SEDIMENT CONTROL MEASURES APPROPRIATE FOR THE PROJECT AND HAVE BEEN APPROVED.

PU ENGINEERING E&S ADMINISTRATOR _____ DATE _____

VB Public Utilities	CITY OF VIRGINIA BEACH - PUBLIC UTILITIES STANDARD DETAILS	SCALE: NOT TO SCALE
DATE: 10/2023	EROSION AND SEDIMENT CONTROL NOTES	DRAWING NO. PU 3.1
		SHEET NO. 1 OF 1

PIPE SIZE	DIMENSION "X" (MIN.)
0"-24"	8"
27"-36"	12"
42"-72"	15"

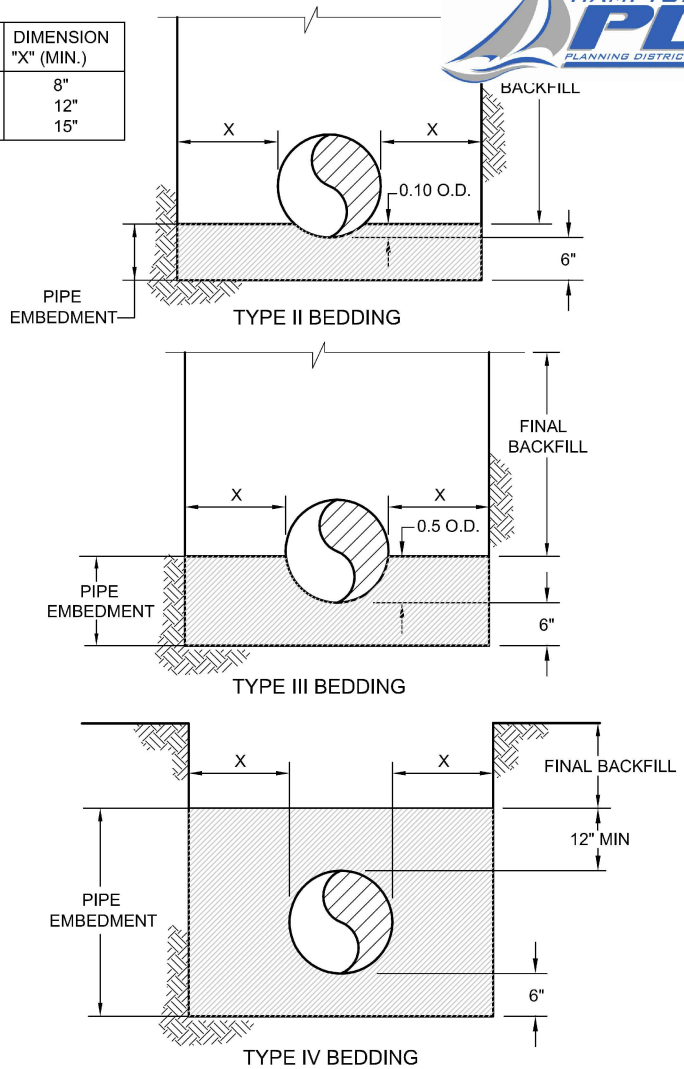

PIPE BEDDING DETAILS

NOT TO SCALE

REFERENCE	CATEGORY	DATE	SHEET No.	DETAIL No.
200,303	EARTHWORK	6/16	1 OF 2	EW_01

VIRGINIA BEACH MODIFICATIONS TO REGIONAL STANDARDS SIXTH EDITION

NOTES:

1. BEDDING TYPE SHALL BE TYPE III UNLESS OTHERWISE SPECIFIED.

Public Utilities

DATE: 10/2023

CITY OF VIRGINIA BEACH - PUBLIC UTILITIES
STANDARD DETAILS

PIPE BEDDING

SCALE: NOT TO SCALE

DRAWING NO. PU 3.2

SHEET NO. 1 OF 2

VIRGINIA BEACH MODIFICATIONS TO REGIONAL STANDARDS SIXTH EDITION

NOTES:

1. THESE BEDDING DETAILS ARE NOT INTENDED FOR THERMOPLASTIC STORM DRAINAGE PIPE
2. BEDDING MATERIAL TO BE ~~APPROVED BY LOCALITY BEFORE USE.~~ 2
3. TRENCH BOTTOM TO BE FREE OF WATER BEFORE PLACING BEDDING.
4. SHAPE RECESSES FOR BELL OF PIPE BY HAND.
5. BACKFILL ABOVE BEDDING WITH ~~SPECIFIED BACKFILL~~ MATERIAL. ~~SEE SPECIFICATIONS SECTION 303.~~ 3
6. ~~REFER TO CONTRACT DOCUMENTS FOR TYPE OF BEDDING.~~
7. MINIMUM TRENCH WIDTH SHALL CONFORM TO PIPE MANUFACTURER'S RECOMMENDATIONS IF MORE STRINGENT.
8. TRENCH BOX OR OTHER SHORING METHODS SHALL NOT DISTURB PIPE EMBEDMENT AND BEDDING MATERIAL AFTER COMPACTION.
9. BEDDING SHALL BE INCLUDED IN THE PRICE OF THE PIPE UNLESS OTHERWISE INDICATED.

2	VDOT NO. 57 STONE.
3	SELECT

REFERENCE	CATEGORY	DATE	SHEET No.	DETAIL No.
200,303	EARTHWORK	6/16	2 OF 2	EW_01

Public Utilities

DATE: 10/2023

CITY OF VIRGINIA BEACH - PUBLIC UTILITIES
STANDARD DETAILS

PIPE BEDDING

SCALE: NOT TO SCALE

DRAWING NO. PU 3.2

SHEET NO. 2 OF 2

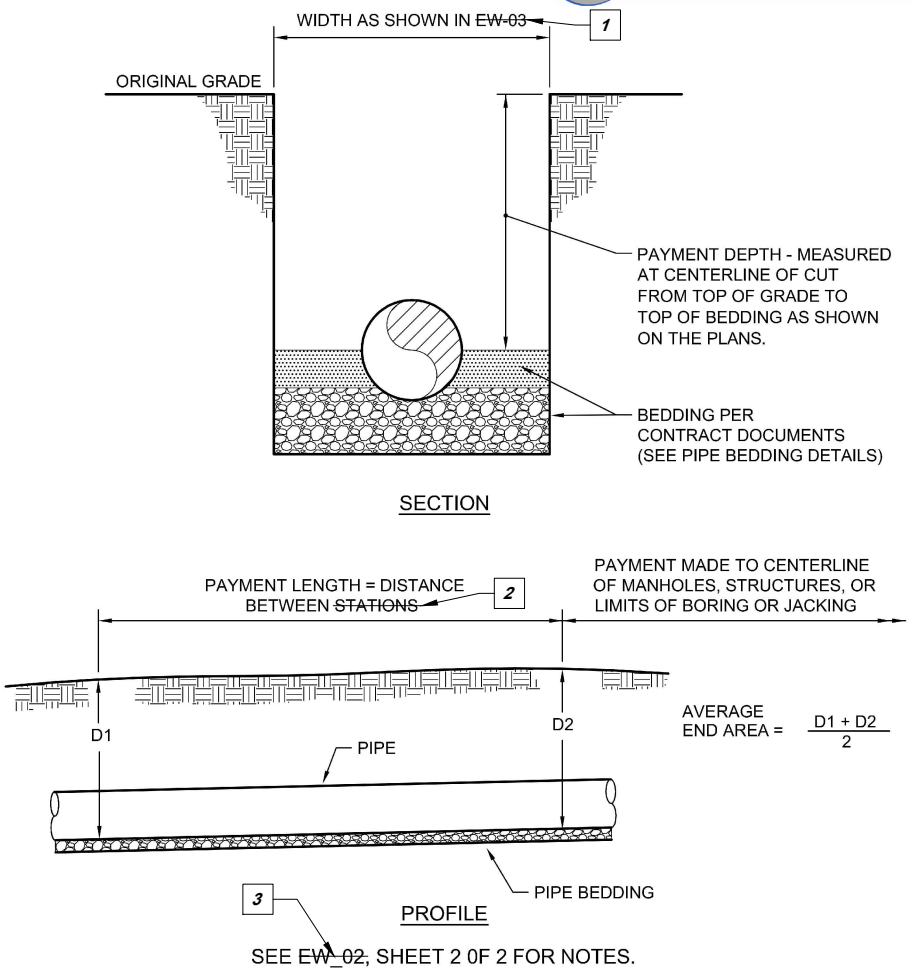

SEE ~~EW_02~~, SHEET 2 0F 2 FOR NOTES.

PAYMENT LIMITS TRENCH EXCAVATION AND BACKFILL

NOT TO SCALE

REFERENCE	CATEGORY	DATE	SHEET No.	DETAIL No.
200,303	EARTHWORK	6/16	1 OF 2	EW_02

VIRGINIA BEACH MODIFICATIONS TO REGIONAL STANDARDS SIXTH EDITION

1. PU 3.4 "TRENCH WIDTH DETAIL FOR PAYMENT OF CONTINGENT ITEMS"
2. *MANHOLES*
3. PU 3.3 "PAYMENT LIMITS TRENCH EXCAVATION AND BACKFILL"

Public Utilities	CITY OF VIRGINIA BEACH - PUBLIC UTILITIES STANDARD DETAILS	SCALE: NOT TO SCALE
		DRAWING NO. PU 3.3
DATE: 10/2023	PAYMENT LIMITS TRENCH EXCAVATION AND BACKFILL	SHEET NO. 1 OF 2

VIRGINIA BEACH MODIFICATIONS TO REGIONAL STANDARDS SIXTH EDITION

4 BASED UPON THE AVERAGE DEPTH OF THE UPSTREAM AND DOWNSTREAM MANHOLES.

NOTES:

1. PAYMENTS SHALL BE MADE USING THE AVERAGE END AREA METHOD AT THE UNIT COST PER FOOT, ~~AT AVERAGE DEPTHS, AT 25' STATIONS BASED ON PLAN GRADES.~~ 4

   EXAMPLE: D1 = 10.5 FT., D2 = 7.3 FT.

   $$\frac{D1 + D2}{2} = \frac{10.5 + 7.3}{2} = \frac{17.8}{2} = 8.9 \text{ FT.}$$

   PAYMENTS WOULD BE MADE AT THE UNIT PRICE BID FOR 8' TO 10' DEPTH FOR THIS ~~25 FOOT~~ SECTION OF TRENCH EXCAVATION AND BACKFILL.

2. IN THE EVENT THE PAYMENT DEPTH SHALL EQUAL THE UPPER LIMIT OF PAYMENT CLASSIFICATION, PAYMENT WILL BE MADE AT THE LOWEST DEPTH UNIT PRICE (e.g. PAYMENT DEPTH = 10 FT.: PAYMENT WILL BE MADE AT THE UNIT PRICE FOR 8' TO 10' DEPTH, NOT AT THE UNIT PRICE FOR 10' TO 12' DEPTH).

3. FOR PIPE DIAMETERS 36-INCHES AND GREATER, DEDUCT THE DISPLACEMENT VOLUME OF THE PIPE FROM THE CALCULATED TRENCH VOLUME OF SELECT MATERIAL BACKFILL TO BE PLACED.

PAYMENT LIMITS
TRENCH EXCAVATION AND BACKFILL

NOT TO SCALE

REFERENCE	CATEGORY	DATE	SHEET No.	DETAIL No.
200,303	EARTHWORK	6/16	2 OF 2	EW_02

PIPE SIZE	DIMENSION "E"
0"-24"	8"
27"-36"	12"
42"-72"	15"

DEPTH (FT.)	DIMENSION "W"*
0-4.99	2' OR O.D.+2E
5-9.99	4' OR O.D.+2E
10-13.99	5' OR O.D.+2E
14-20	7' OR O.D.+2E
OVER 20	SPECIAL DESIGN - SEE CONTRACT DOCUMENTS

* WIDTH FOR COMPUTING QUANTITIES OF SELECT FILL AND UNDERCUT (CONTINGENT ITEMS)

* FOR CONTINGENT ITEMS, "W" SHALL BE THE GREATER OF THE TWO DIMENSIONS LISTED.

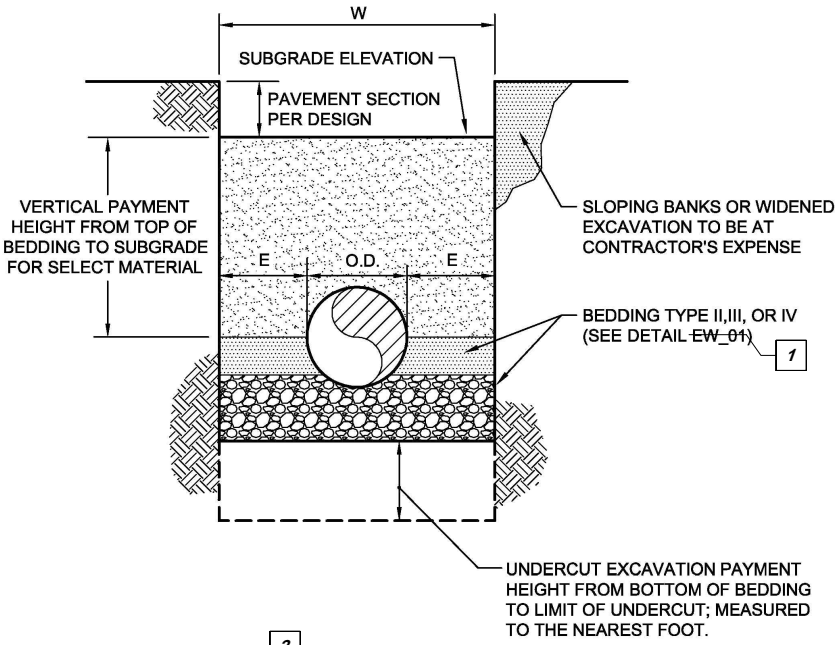

2

SEE ~~EW_03~~, SHEET 2 0F 2 FOR ADDITIONAL NOTES.

TRENCH WIDTH DETAIL FOR PAYMENT OF CONTINGENT ITEMS

NOT TO SCALE

REFERENCE	CATEGORY	DATE	SHEET No.	DETAIL No.
200,303	EARTHWORK	6/16	1 OF 2	EW_03

VIRGINIA BEACH MODIFICATIONS TO REGIONAL STANDARDS SIXTH EDITION

1 PU 3.2 "PIPE BEDDING"

2 PU 3.4 "TRENCH WIDTH DETAIL FOR PAYMENT OF CONTINGENT ITEMS"

Public Utilities

DATE: 10/2023

CITY OF VIRGINIA BEACH - PUBLIC UTILITIES
STANDARD DETAILS

TRENCH WIDTH DETAIL FOR PAYMENT OF CONTINGENT ITEMS

SCALE: NOT TO SCALE

DRAWING NO. PU 3.4

SHEET NO. 1 OF 2

VIRGINIA BEACH MODIFICATIONS TO REGIONAL STANDARDS SIXTH EDITION

3 PU 3.3 "PAYMENT LIMITS TRENCH EXCAVATION AND BACKFILL"

4 PU 3.4 "TRENCH WIDTH DETAIL FOR PAYMENT OF CONTINGENT ITEMS"

NOTES:

1. "W" = MAXIMUM PAYMENT WIDTH FOR CONTINGENT ITEMS IN TRENCH EXCAVATION.
2. VOLUMES TO BE CALCULATED BY AVERAGE END AREA METHOD AS DESCRIBED IN ~~EW_02~~ 3 AND WIDTH ("W") AS DETERMINED IN ~~EW_03.~~ 4
3. NO ADDITIONAL PAYMENT WILL BE MADE FOR EXTRA WIDTH TO ACCOMMODATE MANHOLES OR OTHER APPURTENANCES.
4. MEASUREMENT OF LENGTH TO BE ALONG CENTERLINE OF PIPE FROM START TO FINISH OF CONTINGENT ITEM.
5. CONTINGENT ITEMS INCLUDE SELECT MATERIAL, SELECT BEDDING AND UNDERCUT EXCAVATION.
6. TONNAGE FOR CONTINGENT ITEMS SHALL BE COMPUTED USING THE UNIT WEIGHTS AS SPECIFIED FOR THE TYPE OF MATERIAL WITH VOLUMES DERIVED AS FOLLOWS:
   #57 STONE = 100 LBS./CUBIC FOOT
   #21A, 21B, OR 26 STONE = 138 LBS./CUBIC FOOT
   SAND (VDOT GRADE A) = 110 LBS./CUBIC FOOT

TRENCH WIDTH DETAIL FOR PAYMENT OF CONTINGENT ITEMS

NOT TO SCALE

REFERENCE	CATEGORY	DATE	SHEET No.	DETAIL No.
200,303	EARTHWORK	6/16	2 OF 2	EW_03

Public Utilities

DATE: 10/2023

CITY OF VIRGINIA BEACH - PUBLIC UTILITIES
STANDARD DETAILS

TRENCH WIDTH DETAIL FOR PAYMENT OF CONTINGENT ITEMS

SCALE: NOT TO SCALE

DRAWING NO. PU 3.4

SHEET NO. 2 OF 2

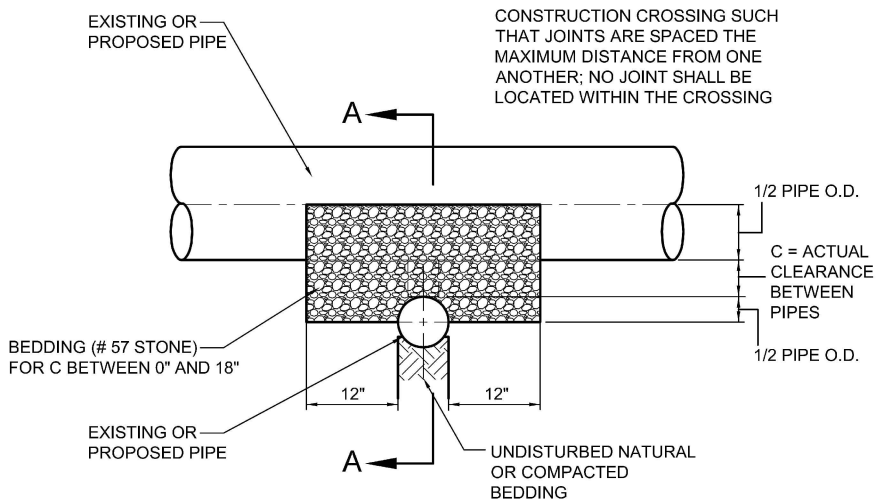

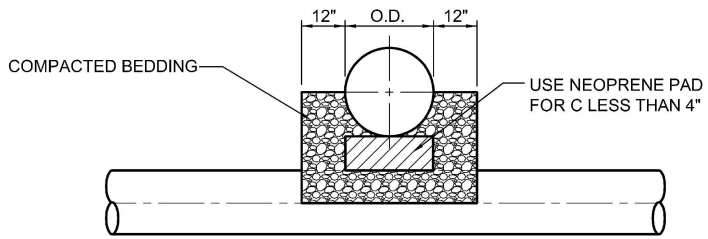

SECTION A-A

NOTE:

1. USE OF THIS DETAIL MUST BE APPROVED BY THE LOCALITY.

PIPE CROSSING

NOT TO SCALE

REFERENCE	CATEGORY	DATE	SHEET No.	DETAIL No.
200, 801, 802, 803	WATER & SANITARY	6/16	1 OF 1	WS_09

VIRGINIA BEACH MODIFICATIONS TO REGIONAL STANDARDS SIXTH EDITION

1. USE OF THIS DETAIL REQUIRES VARIANCE APPROVAL.
2. ADDITIONAL MEASURES MAY BE REQUIRED BEYOND WHAT IS SHOWN ON DETAIL THAT WILL BE DETERMINED DURING THE VARIANCE PROCESS.
3. DETAIL TO BE USED FOR VERTICAL CLEARANCES LESS THAN 18".

Public Utilities

DATE: 10/2023

CITY OF VIRGINIA BEACH - PUBLIC UTILITIES
STANDARD DETAILS

PIPE CROSSING

SCALE: NOT TO SCALE

DRAWING NO. PU 3.5

SHEET NO. 1 OF 1

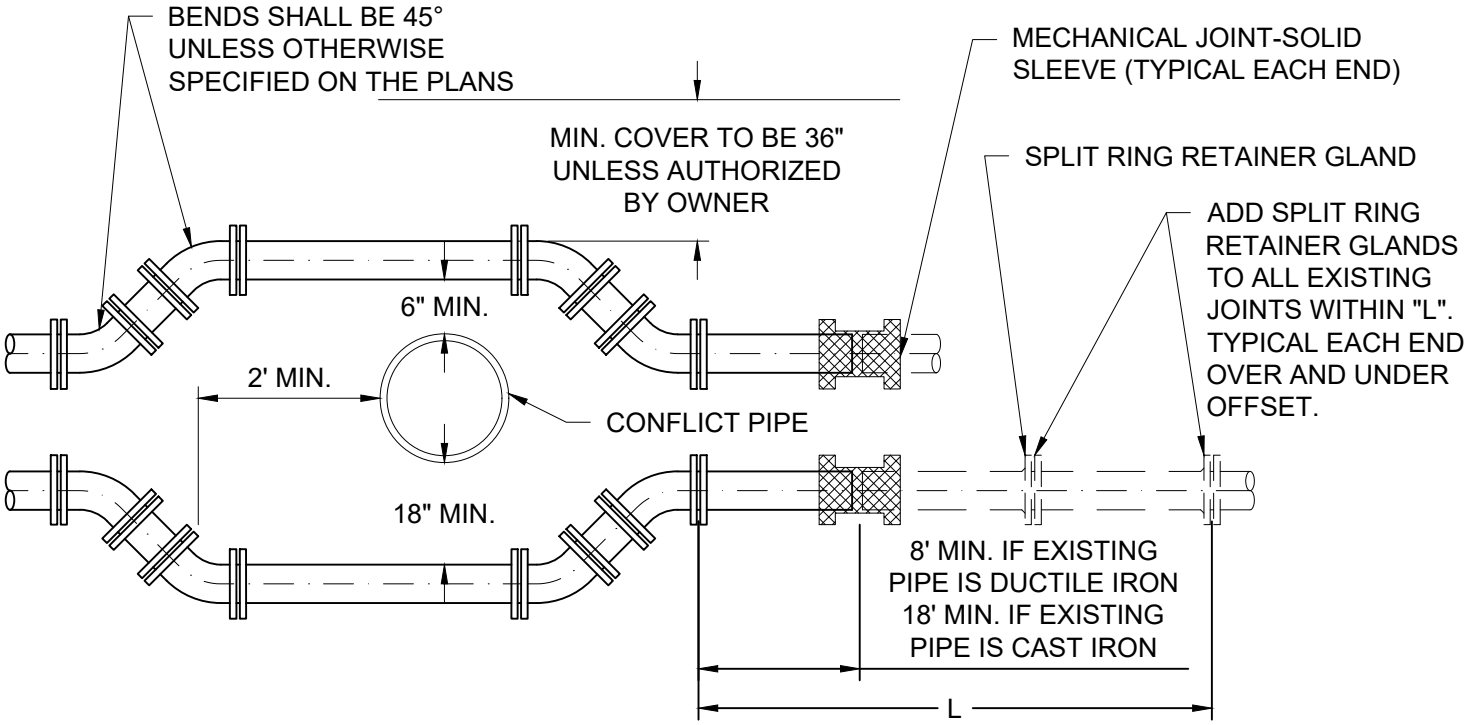

SIZE (DIA. - INCHES)	4"	6"	8"	10"	12"	16"	18"	20"	24"
LENGTH ("L" - FEET)	12'	17'	22'	26'	31'	39'	43'	47'	55'

DESIGN CONDITION
PRESSURE - 150 PSI
SOIL TYPE - SILT
DEPTH OF COVER - 3 FEET

NOTES:

1. VERTICAL SEPARATION OF LESS THAN 18" REQUIRES VARIANCE APPROVAL.
2. RETAINER GLANDS ARE REQUIRED AT EACH FITTING.
3. ALL PIPE AND FITTINGS SHALL BE DUCTILE IRON, MECHANICAL JOINT, CLASS 52 (MIN.).
4. EXISTING C.I. PIPE SHALL BE REPLACED WITH AN 18' MINIMUM LENGTH OF D.I. PIPE AT BOTH ENDS OF THE OFFSET AND RETAINER GLANDS INSTALLED.
5. THE EXISTING PIPE SHALL HAVE ALL JOINTS WITHIN THE LENGTH "L" RESTRAINED BY ADDING A SPLIT RING RETAINER GLAND WITH BOLTS TO THE M.J. BELL.
6. LENGTH "L" IN FEET SHALL CONFORM TO THE TABLE ABOVE UNLESS LONGER LENGTHS ARE SHOWN ON THE PLANS. REQUIRED RESTRAINING LENGTH (L) APPLIES ONLY FOR DESIGN CONDITION SPECIFIED.
7. SPLIT RING RETAINER GLANDS ARE FOR THE USE ON DUCTILE IRON MECHANICAL JOINT PIPE ONLY. IF EXISTING PIPE IS ANY OTHER MATERIAL, REMOVE AND REPLACE WITH D.I. MECHANICAL JOINT PIPE FOR THE LENGTH "L" SPECIFIED.

VB Public Utilities	CITY OF VIRGINIA BEACH - PUBLIC UTILITIES STANDARD DETAILS	SCALE: NOT TO SCALE
		DRAWING NO. PU 3.6
DATE: 10/2023	VERTICAL OFFSET WATER AND SANITARY SEWER FACILITIES	SHEET NO. 1 OF 1

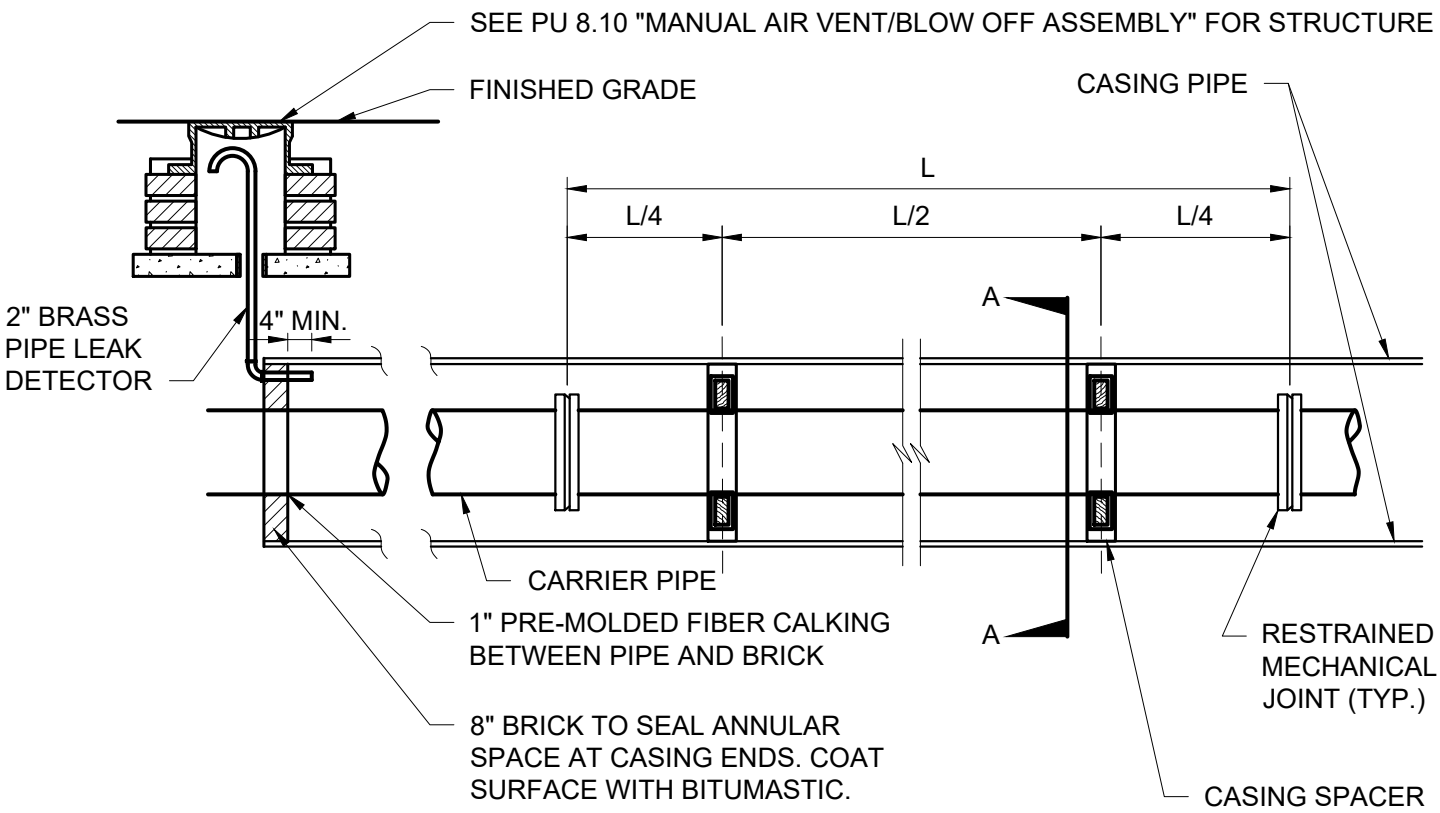

DIMENSIONS		
DIA CARRIER PIPE	DIA CASING PIPE	WALL THICKNESS
6"	16"	0.250"
8"	18"	0.281"
10"	20"	0.312"
12"	24"	0.375"

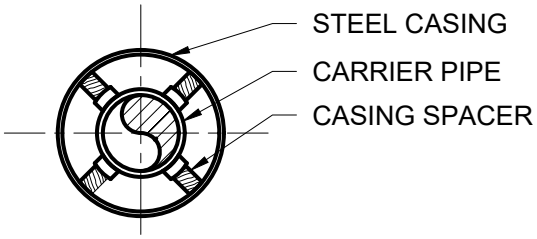

SECTION A-A

NOTES:

1. CASING PIPE SHALL BE WELDED STEEL PIPE MEETING ASTM 139-93A, GRADE B.
2. CARRIER PIPE SHALL BE AT MINIMUM, CLASS 52.
3. ALL JOINTS INSIDE AND ONE JOINT OUTSIDE CASING PIPE SHALL BE RESTRAINED MECHANICAL JOINTS. INTERNAL GASKET RESTRAINT NOT PERMITTED.
4. LEAK DETECTORS MUST BE INSTALLED, AT MINIMUM, ON ONE END OF ENCASEMENT.
5. CONTRACTOR TO ENSURE COMPLETE SEAL ON BOTH ENDS OF ENCASEMENT.

VB Public Utilities	CITY OF VIRGINIA BEACH - PUBLIC UTILITIES STANDARD DETAILS	SCALE: NOT TO SCALE
		DRAWING NO. PU 3.7
DATE: 10/2023	ENCASEMENT	SHEET NO. 1 OF 1

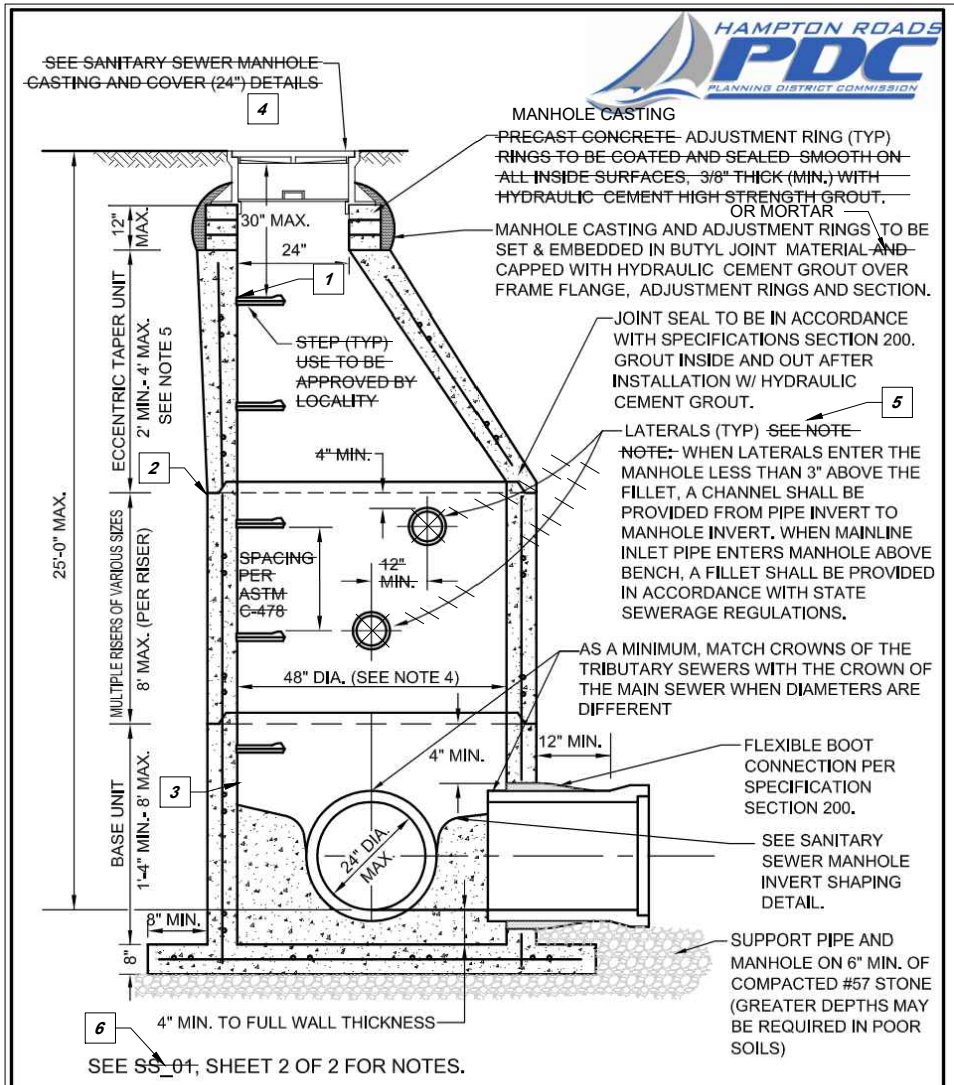

STANDARD PRECAST CONCRETE MANHOLE W/ EXTENDED MONOLITHIC BASE

NOT TO SCALE

REFERENCE	CATEGORY	DATE	SHEET No.	DETAIL No.
200,802	SANITARY SYSTEMS	6/16	1 OF 2	SS_01

VIRGINIA BEACH MODIFICATIONS TO REGIONAL STANDARDS SIXTH EDITION

1 ELIMINATE STEPS.

2 PROVIDE WATERPROOF BUTYL 4" TAPE ON EXTERIOR OF JOINTS.

3 PROVIDE H2S RESISTANT PROTECTIVE COATING FROM APPROVED PRODUCT LIST.

4 SEE PU 4.11 "MANHOLE FRAME" AND PU 4.12 "MANHOLE COVER".

5 LATERAL MUST ENTER MANHOLE WITHIN 2' OF INVERT UNLESS A DROP CONNECTION IS USED.

6 PU 4.1 "STANDARD PRECAST CONCRETE MANHOLE W/ EXTENDED MONOLITHIC BASE"

VB Public Utilities	CITY OF VIRGINIA BEACH - PUBLIC UTILITIES STANDARD DETAILS	SCALE: NOT TO SCALE
		DRAWING NO. PU 4.1
DATE: 10/2023	STANDARD PRECAST CONCRETE MANHOLE W/ EXTENDED MONOLITHIC BASE	SHEET NO. 1 OF 2

VIRGINIA BEACH MODIFICATIONS TO REGIONAL STANDARDS SIXTH EDITION

7 LATERALS ARE NOT ALLOWED TO ENTER CROWN SECTION.

NOTES:

1. PRECAST CONCRETE MANHOLE TO BE IN COMPLIANCE WITH ASTM C-478.
2. WALL THICKNESS TO BE 5" MINIMUM FOR 48" INSIDE DIAMETER MANHOLES AND 6" MINIMUM FOR 60" INSIDE DIAMETER MANHOLES.
3. INSIDE DIAMETER OF MANHOLE MUST INCREASE TO 60" WHEN MANHOLE DEPTH IS GREATER THAN 12 FEET. 60" DIAMETER TO BE CONTINUOUS UP TO CONE SECTION.
4. MAXIMUM OF FOUR LATERALS PER MANHOLE.
5. ~~IF LATERALS ARE TO ENTER INTO THE ECCENTRIC TAPER UNIT, THEY MUST ENTER ON THE NON-TAPERED SIDE.~~ 7

STANDARD PRECAST CONCRETE MANHOLE W/ EXTENDED MONOLITHIC BASE

NOT TO SCALE

REFERENCE	CATEGORY	DATE	SHEET No.	DETAIL No.
200,802	SANITARY SYSTEMS	6/16	2 OF 2	SS_01

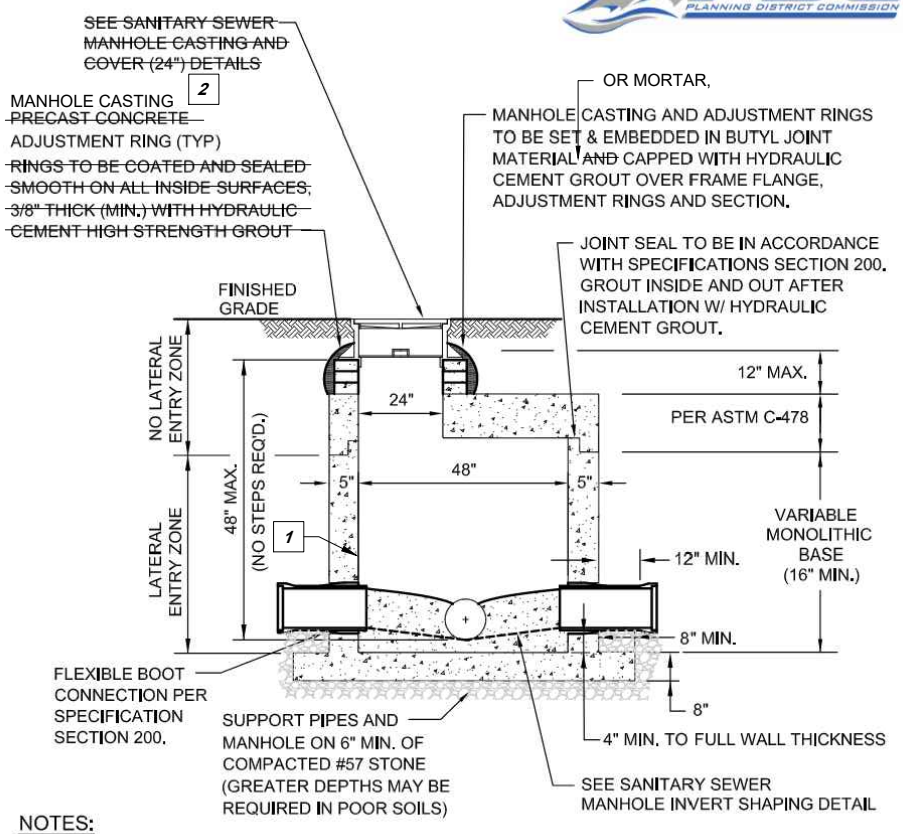

NOTES:

1. FLAT TOP CAN BE REPLACED W/ 1'-4" ECCENTRIC SHALLOW CONE IF APPROVED BY LOCALITY.
2. PRECAST MANHOLE TO BE IN COMPLIANCE WITH ASTM C-478.

PRECAST CONCRETE SHALLOW MANHOLE

NOT TO SCALE

REFERENCE	CATEGORY	DATE	SHEET No.	DETAIL No.
200,802	SANITARY SYSTEMS	6/16	1 OF 1	SS_02

VIRGINIA BEACH MODIFICATIONS TO REGIONAL STANDARDS SIXTH EDITION

1 PROVIDE PROTECTIVE COATING WITH APPROVED EPOXY-RESIN BASED ON HIGH BUILD SYSTEM.

2 SEE PU 4.11 "MANHOLE FRAME" AND 4.12 "MANHOLE COVER".

Public Utilities	CITY OF VIRGINIA BEACH - PUBLIC UTILITIES STANDARD DETAILS	SCALE: NOT TO SCALE
		DRAWING NO. PU 4.2
DATE: 10/2023	PRECAST CONCRETE SHALLOW MANHOLE	SHEET NO. 1 OF 1

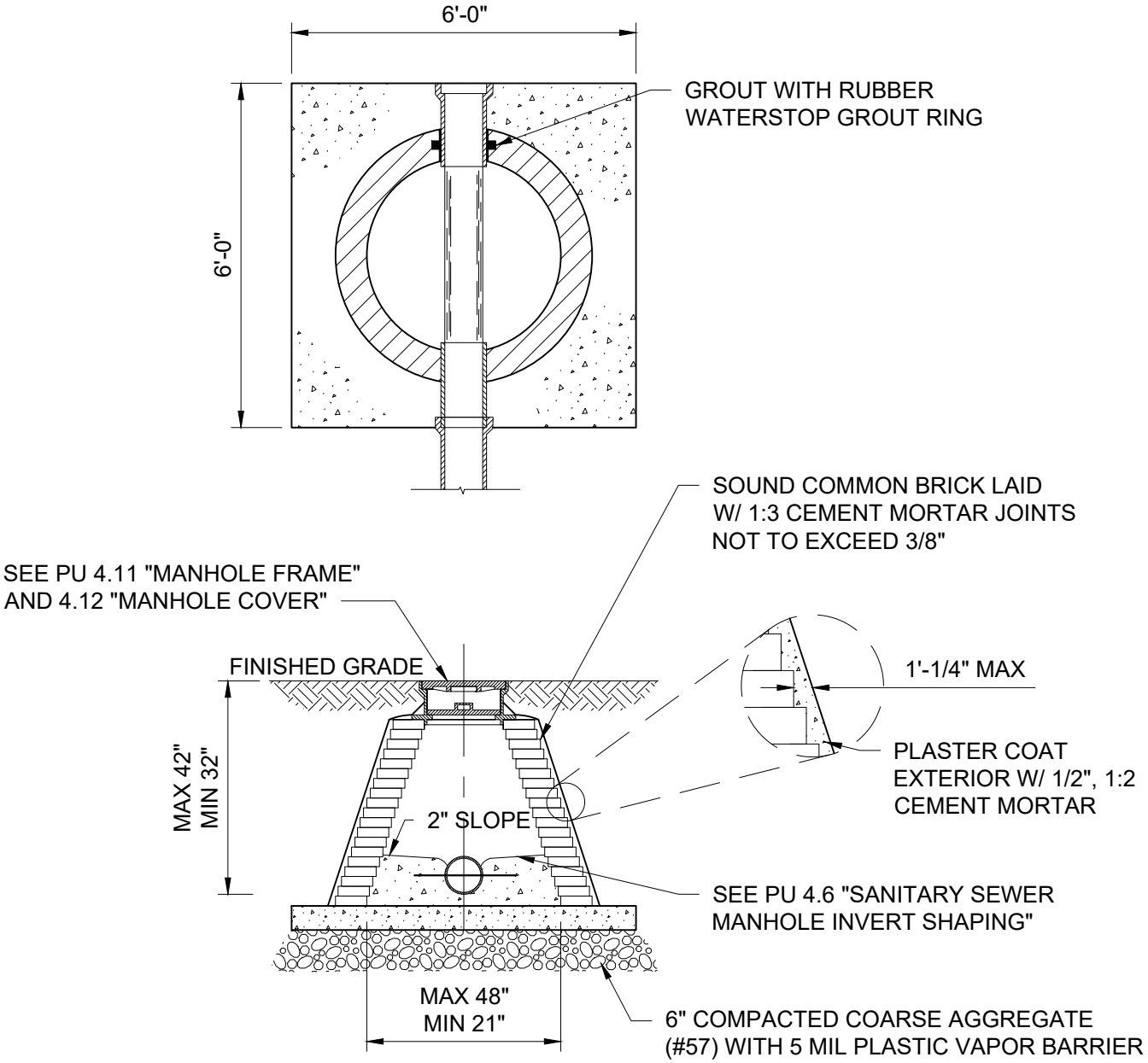

NOTES:

1. SHALLOW BRICK MANHOLE MUST BE APPROVED FOR USE BY PUBLIC UTILITIES.

2. CONCRETE BASE TO BE CONSTRUCTED USING CLASS A-3, 3000 P.S.I. CONCRETE USING 6 X 6 - W2.9 X W2.9 WIRE FABRIC REINFORCEMENT FOR IN-PLACE CONSTRUCTION OR #4 REBAR E.W. @ 12" O.C. FOR PRECAST CONSTRUCTION.

3. PROVIDE H_2S RESISTANT PROTECTIVE COATING FROM APPROVED PRODUCT LIST.

4. MODIFIED SHALLOW FRAME AND COVER MAY BE USED WITH APPROVAL FROM PUBLIC UTILITIES.

Public Utilities	CITY OF VIRGINIA BEACH - PUBLIC UTILITIES STANDARD DETAILS	SCALE: NOT TO SCALE
		DRAWING NO. PU 4.3
DATE: 10/2023	SHALLOW BRICK SANITARY SEWER MANHOLE	SHEET NO. 1 OF 1

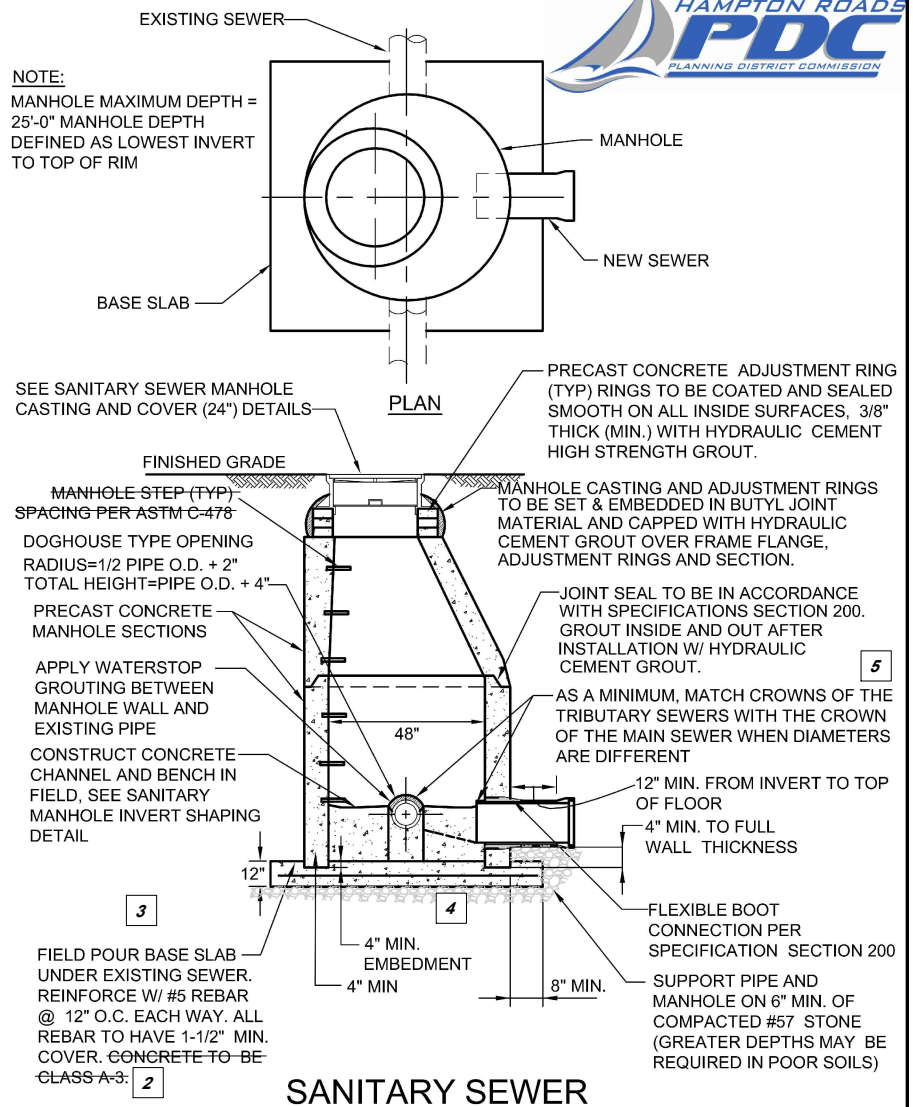

SANITARY SEWER STRADDLE MANHOLE

NOT TO SCALE

REFERENCE	CATEGORY	DATE	SHEET No.	DETAIL No.
200,802	SANITARY SYSTEMS	6/16	1 OF 2	SS_03

VIRGINIA BEACH MODIFICATIONS TO REGIONAL STANDARDS SIXTH EDITION

1 USE OF THIS DETAIL REQUIRES APPROVAL BY PUBLIC UTILITIES.

2 SET MANHOLE SECTION IN WET BASE SLAB CONCRETE. CONCRETE TO BE MINIMUM 4,000 PSI, HIGH EARLY STRENGTH.

3 SUPPORT MANHOLE SECTION UNTIL BASE HAS CURED, MINIMUM OF 24 HOURS.

4 BOTTOM SECTION SHALL ONLY BE 4' IN HEIGHT (INSTALL IN WET CEMENT AND HOLD IN PLACE).

5 IF PROPOSED SS IS HIGHER THAN EXISTING SS LEAVE THE EXISTING SS IN PLACE AND SAW CUT THE TOP OF THE EXISTING SS PIPE, THEN BUILD THE BENCH.

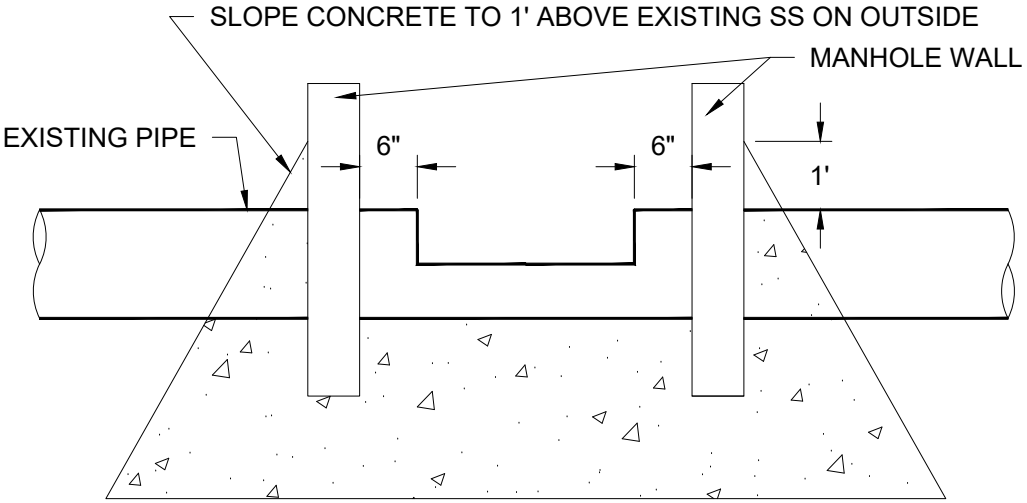

INSTALL WATERSTOP / LINK-SEAL AROUND EXISTING PIPING PRIOR TO POURING CONCRETE BASE.

Public Utilities

DATE: 10/2023

CITY OF VIRGINIA BEACH - PUBLIC UTILITIES
STANDARD DETAILS

SANITARY SEWER STRADDLE MANHOLE

SCALE: NOT TO SCALE

DRAWING NO. PU 4.4

SHEET NO. 1 OF 2

VIRGINIA BEACH MODIFICATIONS TO REGIONAL STANDARDS SIXTH EDITION

NOTES:

1. PRECAST MANHOLE TO BE IN COMPLIANCE WITH ASTM C-478.
2. WALL THICKNESS TO BE 5" MINIMUM FOR 48" INSIDE DIAMETER MANHOLES AND 6" MINIMUM FOR 60" INSIDE DIAMETER MANHOLES.
3. INSIDE DIAMETER OF MANHOLE MUST INCREASE TO 60" WHEN MANHOLE DEPTH IS GREATER THAN 12 FEET. 60 INCH DIAMETER TO BE CONTINUOUS UP TO CONE SECTION.

SANITARY SEWER STRADDLE MANHOLE

NOT TO SCALE

REFERENCE	CATEGORY	DATE	SHEET No.	DETAIL No.
200,802	SANITARY SYSTEMS	6/16	2 OF 2	SS_03

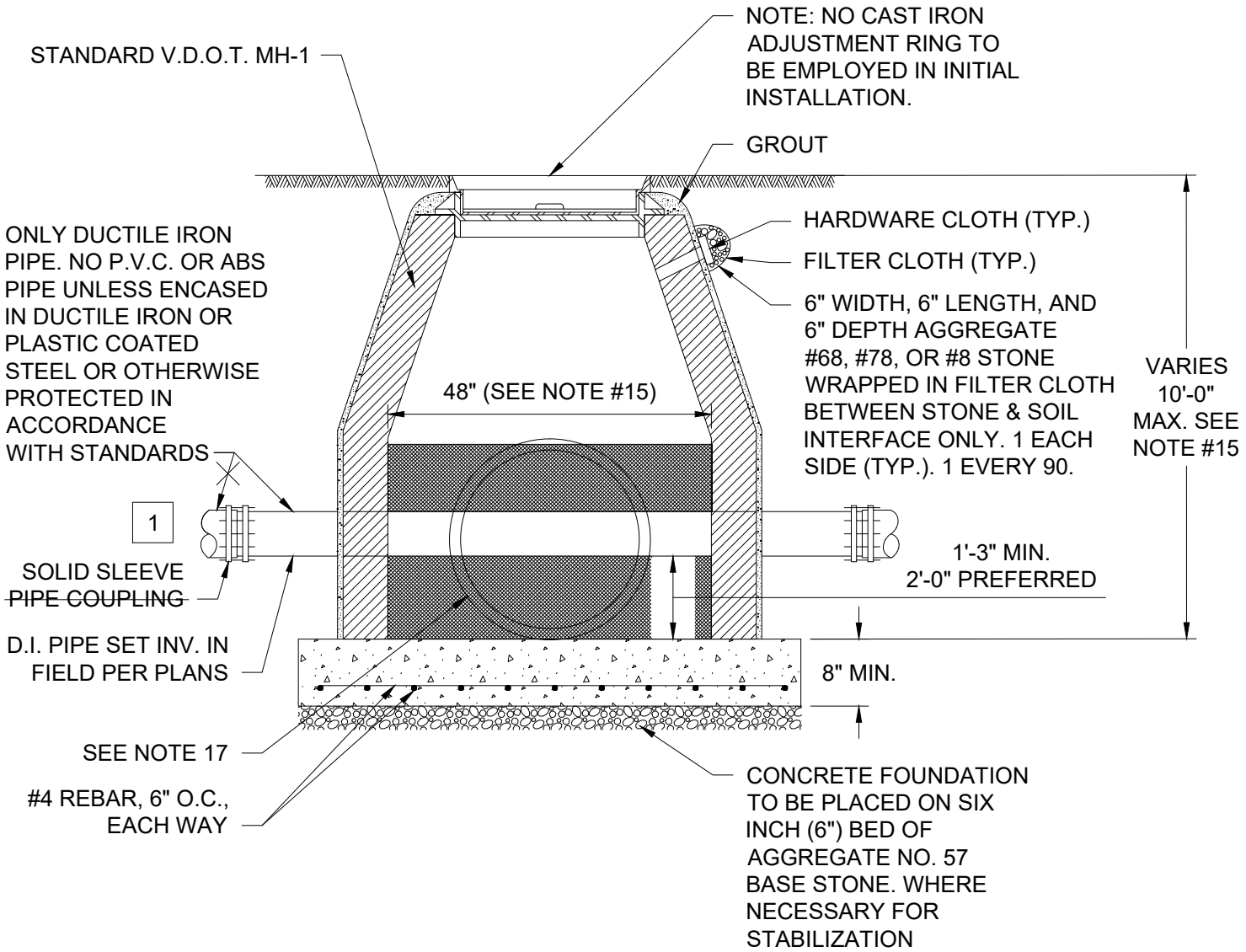

NOTE:

1 WHEN WATER AND SEWER ARE INVOLVED WITH THE CONFLICT STRUCTURE, INSTALL THE CROSSING AS HIGH IN THE STRUCTURE AS POSSIBLE.

2 USE OF THIS DETAIL REQUIRES APPROVAL BY PUBLIC UTILITIES.

Public Utilities	CITY OF VIRGINIA BEACH - PUBLIC UTILITIES STANDARD DETAILS	SCALE: NOT TO SCALE
	SPECIAL MANHOLE SHOWING D.I. SANITARY SEWER PASSING THROUGH 2	DRAWING NO. PU 4.5
DATE: 10/2023		SHEET NO. 1 OF 2

NOTES:

1. MAXIMUM DEPTH (H) TO BE 10'.
2. THE "H" DIMENSIONS SHOWN ON THE STANDARDS AND SPECIFIED ON THE PLANS WILL BE MEASURED FROM THE INVERT OF THE OUTFALL PIPE. PLAN "H" DIMENSIONS ARE APPROXIMATE ONLY FOR ESTIMATING PURPOSES AND THE ACTUAL DIMENSIONS SHALL BE DETERMINED BY THE CONTRACTOR FROM FIELD CONDITIONS.
3. WHEN SPECIFIED ON PLANS THE INVERT IS TO BE SHAPED IN ACCORDANCE WITH STANDARD PLAN V.D.O.T. IS-1. THE COST OF FURNISHING AND PLACING ALL MATERIALS INCIDENTAL TO THE SHAPING IS TO BE INCLUDED IN THE PRICE BID FOR THE DROP INLET COMPLETE.
4. ALL DRAINAGE STRUCTURES WITHIN THE CITY RIGHT-OF-WAYS AND EASEMENTS AND ON CITY PROPERTY SHALL BE PRECAST OR CAST -IN-PLACE, UNLESS OTHERWISE APPROVED BY THE DEPARTMENT OF PUBLIC WORKS.
5. ALL CAST-IN-PLACE CONCRETE TO BE CLASS A3 3,000 P.S.I., CONCRETE WITH REBAR. PRECAST CONCRETE SHALL BE 4,000 P.S.I. WITH REBAR.
6. #4 X 8" SMOOTH DOWELS @ APPROX. 12" C-C TO BE PLACED IN ALL AREAS ADJACENT TO ABUTTING CONCRETE. KEYWAYS OR OTHER MEANS OF PREVENTING SETTLEMENT MAY BE SUBSTITUTED WHEN APPROVED BY THE ENGINEER.
7. WEEP HOLE WITH 12" X 12" PLASTIC HARDWARE CLOTH 1/4" MESH OR GALVANIZED STEEL WIRE, MINIMUM WIRE DIAMETER 0.03 INCH, NUMBER 4 MESH HARDWARE CLOTH ANCHORED FIRMLY TO OUTSIDE OF STRUCTURE. AT LEAST ONE WEEP HOLE SHALL BE PROVIDED ON ALL FOUR SIDES, AND TWO ON ANY SIDE FACING A PAVEMENT SECTION. THE NUMBER, THE DIMENSIONS AND THE LOCATIONS OF THE WEEP HOLES MAY BE MODIFIED TO COINCIDE WITH STANDARD V.D.O.T. PRECAST STRUCTURE SPECIFICATIONS, HOWEVER, WEEP HOLES SHALL BE PROVIDED IN ANY CASE ON ALL DRAINAGE STRUCTURES.
8. ANY ALTERNATE METHODS OF ANCHORAGE, MEETING THE APPROVAL OF THE ENGINEER, MAY BE SUBSTITUTED FOR THE CAST IRON LUGS AS SHOWN HEREON.
9. THIS ITEM MAY BE USED INSTEAD OF V.D.O.T. INLETS. SEE 8.6.1 "DRAINAGE STRUCTURES" IN SECTION 8 OF PUBLIC WORKS DESIGN STANDARDS MANUAL.
10. GENERAL SPECIFICATIONS:
    A. CAST IRON SHALL CONFORM TO VDOT ROAD AND BRIDGE SPECIFICATIONS
    B. TEST BARS SHALL BE PROVIDED
    C. WEIGHT SHALL BE PAINTED ON FRAME AND COVER
    D. WEIGHT: FRAME - 66 LBS.
       COVER - 354 LBS.
       TOTAL - 415 LBS.
11. CASTINGS SHALL BE A GOOD GRADE OF GREY IRON.
12. FOR PRIVATE DEVELOPMENT WALLS MAY BE BRICK, SOLID CONCRETE BLOCK, OR CLASS A-3 (3,000 P.S.I.) CONCRETE WITH REINFORCING STEEL. THIS ITEM MAY BE CAST IN PLACE OR PRECAST FOR PRIVATE DEVELOPMENT. MATERIAL SHALL CONFORM TO VDOT ROAD AND BRIDGE SPECIFICATIONS.
13. MORTAR SHALL BE MIXED, 1 OF PORTLAND CEMENT TO 3 OF CLEAN GRADED SAND. JOINTS SHALL BE FLUSHED FULL. INSIDE AND OUTSIDE OF ALL WALLS SHALL BE FULLY PLASTERED, 1/2" THICK (MIN.) OF 1:3 MORTAR.
14. CAST IRON TOPS AND FRAMES SHALL BE SUFFICIENTLY TRUE TO A PLANE SURFACE, SO THAT TOPS WILL NOT ROCK.
15. IF THE INSIDE DIAMETER OF THE STRUCTURE EXCEEDS 48", AND/OR IF THE MAXIMUM ALLOWED DEPTH EXCEEDS THAT AS SHOWN, THEN USE VDOT STANDARDS AS NECESSARY.
16. SHADED AREAS MUST EQUAL (MIN.) 1.5 TIMES THE CROSS-SECTIONAL AREA OF THE STORM DRAIN.
17. EXIST. OR PROP. STORM DRAIN PIPE - DETERMINE INV. IN FIELD. IF INVERT OF EITHER THE STORM DRAINAGE OR THE SANITARY SEWER PIPE SYSTEMS MAY BE RAISED OR LOWERED TO AVOID THE CONFLICT, THAT IS PREFERABLE TO A CONFLICT STRUCTURE. IN THAT CASE, SPECIAL CONSIDERATION TO BUFFERING THE WEIGHT BETWEEN THE TWO PIPES MAY BE NECESSARY.
18. IF INVERT MUST BE PLACED IN A SUMP TO MEET THE 15-INCH MINIMUM CLEARANCE, A SPECIAL DESIGN IS REQUIRED.
19. THE LENGTH OF THE DUCTILE IRON SANITARY SEWER PIPE SHALL BE CENTERED AT THE POINT OF CROSSING SO THAT THE JOINTS WILL BE EQUIDISTANCE AND AS FAR AS POSSIBLE FROM THE CONFLICT STRUCTURE.

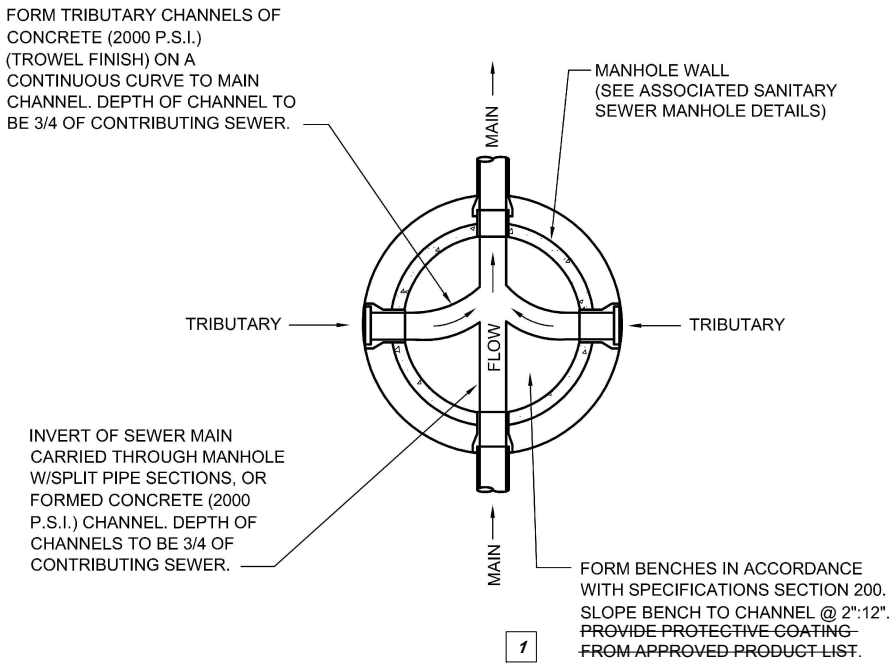

VIRGINIA BEACH MODIFICATIONS TO REGIONAL STANDARDS SIXTH EDITION

1 PROVIDE H_2S RESISTANT PROTECTIVE COATING FROM APPROVED PRODUCT LIST.

SANITARY SEWER MANHOLE INVERT SHAPING

NOT TO SCALE

REFERENCE	CATEGORY	DATE	SHEET No.	DETAIL No.
200,802	SANITARY SYSTEMS	6/16	1 OF 1	SS_07

Public Utilities

DATE: 10/2023

CITY OF VIRGINIA BEACH - PUBLIC UTILITIES
STANDARD DETAILS

SANITARY SEWER MANHOLE INVERT SHAPING

SCALE: NOT TO SCALE

DRAWING NO. PU 4.6

SHEET NO. 1 OF 1

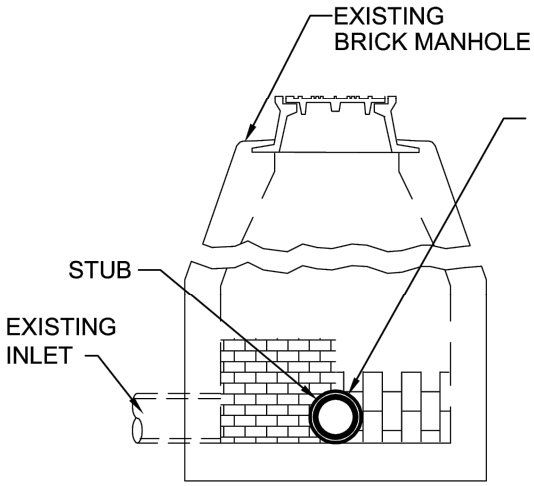

SECTION A-A

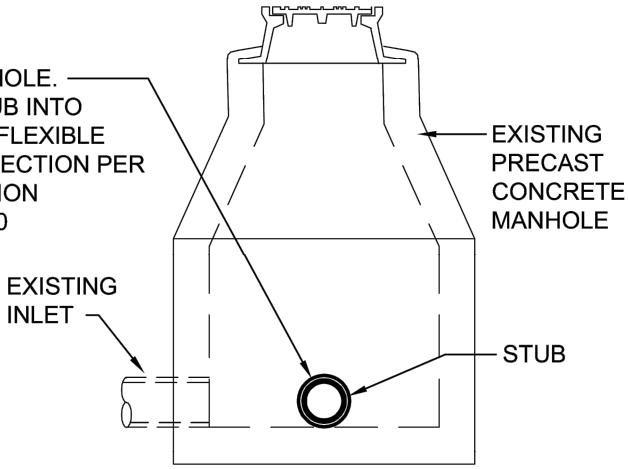

SECTION C-C

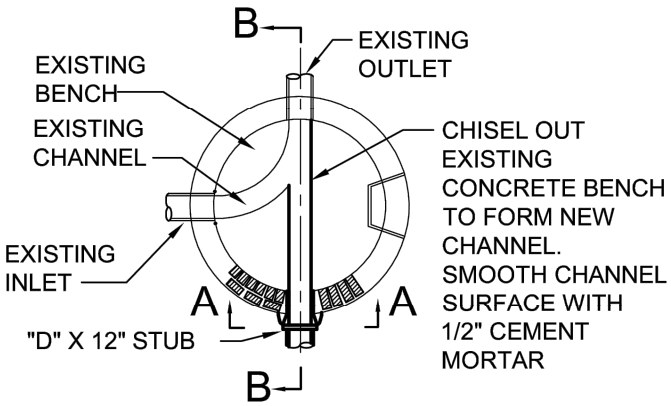

BASE PLAN OF
BRICK MANHOLE

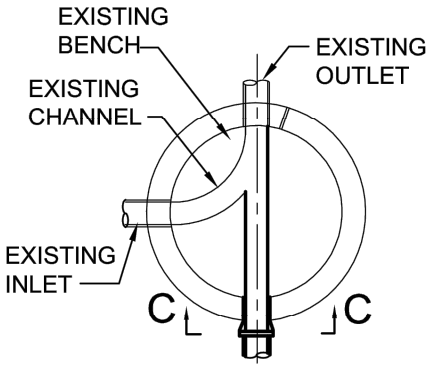

BASE PLAN OF
PRE-CAST MANHOLE

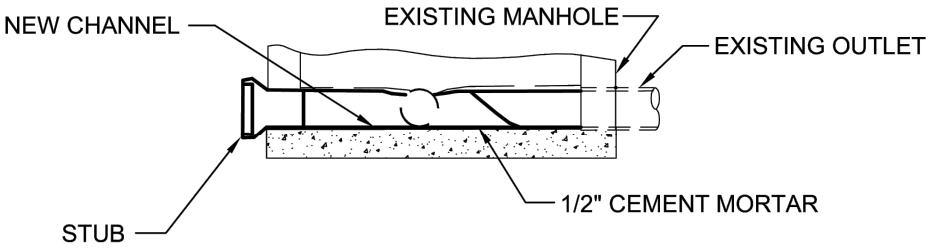

SECTION B-B

CONNECTION INTO EXISTING MANHOLES

NOT TO SCALE

REFERENCE	CATEGORY	DATE	SHEET No.	DETAIL No.
200,802	SANITARY SYSTEMS	6/16	1 OF 1	SS_08

Public Utilities	CITY OF VIRGINIA BEACH - PUBLIC UTILITIES STANDARD DETAILS	SCALE: NOT TO SCALE
		DRAWING NO. PU 4.7
DATE: 10/2023	CONNECTION INTO EXISTING MANHOLES	SHEET NO. 1 OF 1

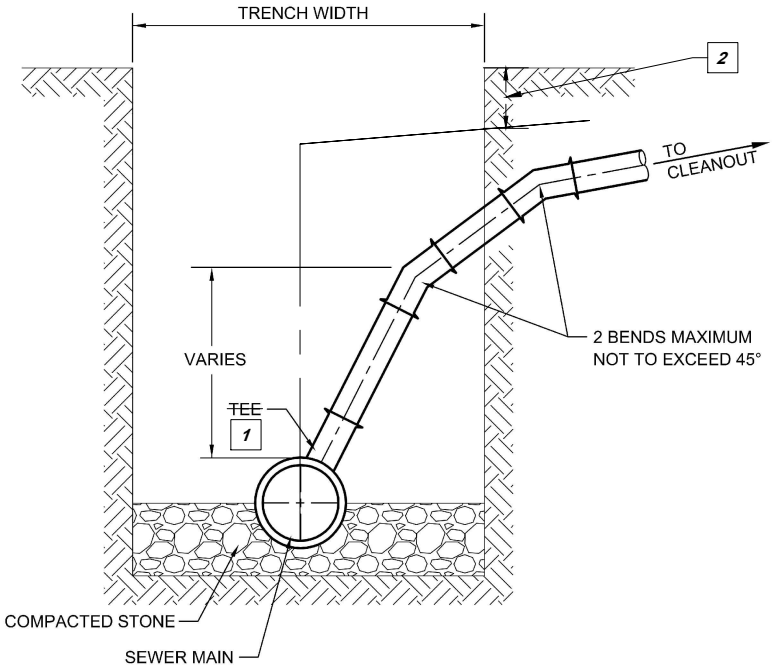

ELEVATION

NOTES:

1. LATERAL MATERIAL TO MATCH SEWER MAIN MATERIAL.
2. TRACER WIRE SHALL BE INSTALLED CONTINUOUSLY FROM THE MAIN TO THE RIGHT-OF-WAY LINE DIRECTLY ON TOP OF THE PVC LATERAL~~, ATTACHED EVERY 10 FEET.~~

DEEP SANITARY SEWER SERVICE CONNECTION

NOT TO SCALE

REFERENCE	CATEGORY	DATE	SHEET No.	DETAIL No.
200,802	SANITARY SYSTEMS	6/16	1 OF 1	SS_16

VIRGINIA BEACH MODIFICATIONS TO REGIONAL STANDARDS SIXTH EDITION

1 USE WYE INSTEAD OF A TEE CONNECTION.

2 TRACER WIRE SHALL BE AWG 10 SOLID COPPER WIRE WITH POLYETHYLENE INSULATION. THE TRACER WIRE SHALL BE ATTACHED TO THE LATERAL PIPE WHEN THE DEPTH IS NO GREATER THAN 4.0 FEET (PVC ONLY). THE WIRE SHALL BE BURIED OVER THE CENTERLINE OF THE LATERAL PIPE AT 3.0 FEET BELOW GRADE WHEN THE LATERAL DEPTH IS GREATER THAN 4.0 FEET (PVC ONLY). WHEN THE TRACER WIRE IS ATTACHED TO THE LATERAL AND RISER ASSEMBLY, WITH BE FASTENED WITH TIE TRAPS OR APPROVED EQUAL.

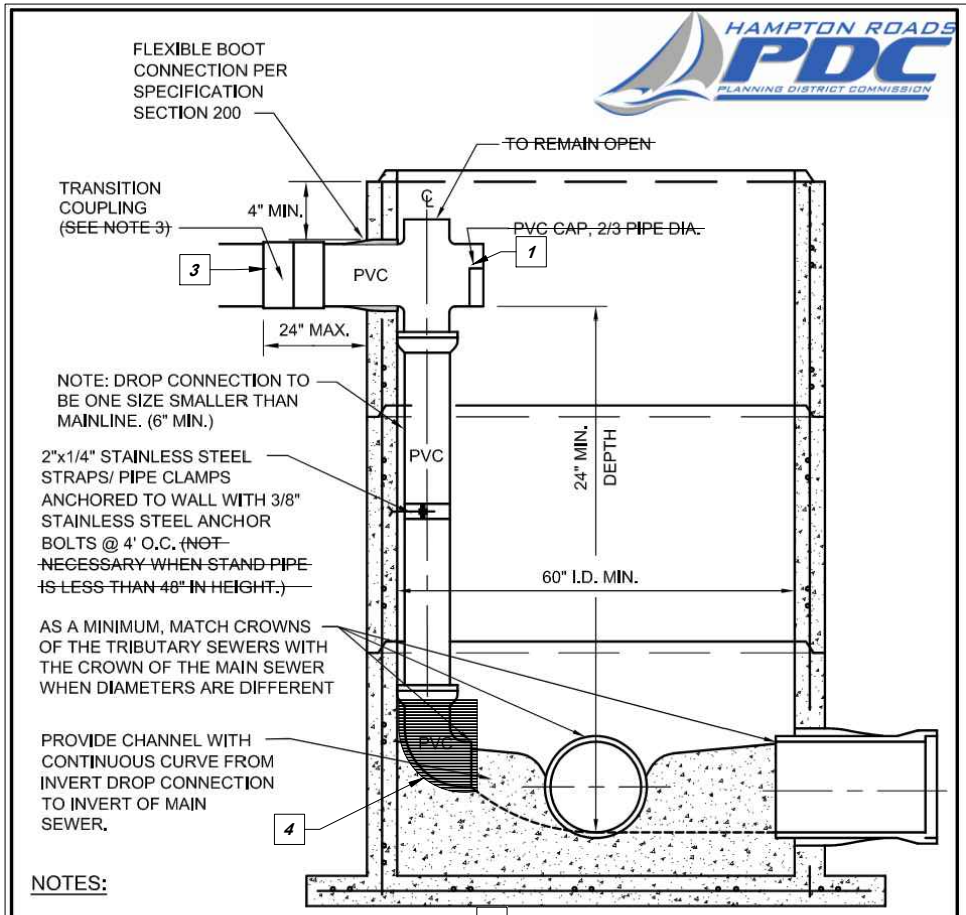

NOTES:

1. INTERIOR DROP TO BE USED IN NEW MANHOLES. 5
2. ~~SOLVENT WELD JOINTS ON ALL INSIDE PIPING AND FITTINGS.~~ 2
3. MAINLINE TO PVC DROP CONNECTION SHALL BE MADE WITH APPROVED COUPLING.
4. LOCATION OF DROP CONNECTION SHALL NOT CONFLICT WITH THE LOCATION OF THE MANHOLE STEPS.
5. BOTTOM 90 DEGREE BEND TO BE AT 45 DEGREES WITH RESPECT TO THE DOWNSTREAM FLOW.
6. PRECAST CONCRETE MANHOLE TO BE IN COMPLIANCE WITH ASTM C-478.
7. INTERIOR DROP SHALL BE NO MORE THAN 6 - INCHES FROM MANHOLE WALL.
8. ~~ALL PVC PIPE AND FITTINGS SHALL BE SCHEDULE 40.~~ 2

SANITARY SEWER INTERIOR DROP ~~MANHOLE~~ CONNECTION

NOT TO SCALE

REFERENCE	CATEGORY	DATE	SHEET No.	DETAIL No.
200,802	SANITARY SYSTEMS	6/16	1 OF 1	SS_04

VIRGINIA BEACH MODIFICATIONS TO REGIONAL STANDARDS SIXTH EDITION

1. IN LIEU OF CROSS UTILIZE A TEE WITH THE BRANCH DOWN.
2. ALL PVC PIPE AND FITTINGS SHALL BE SDR 26.
3. IRON CONNECTIONS SHALL BE SOLID SLEEVE AND CLAY CONNECTIONS SHALL BE NON-SHEER.
4. ENVELOPE BEND WITH MORTAR. BENDS/BENCH SHALL BE MODIFIED TO ALLOW FOR THE INSTALLATION OF THE DROP BEND ENVELOPMENT.
5. TO BE USED IN NEW AND EXISTING MANHOLES.

Public Utilities

DATE: 10/2023

CITY OF VIRGINIA BEACH - PUBLIC UTILITIES
STANDARD DETAILS

SANITARY SEWER INTERIOR DROP CONNECTION

SCALE: NOT TO SCALE

DRAWING NO. PU 4.9

SHEET NO. 1 OF 1

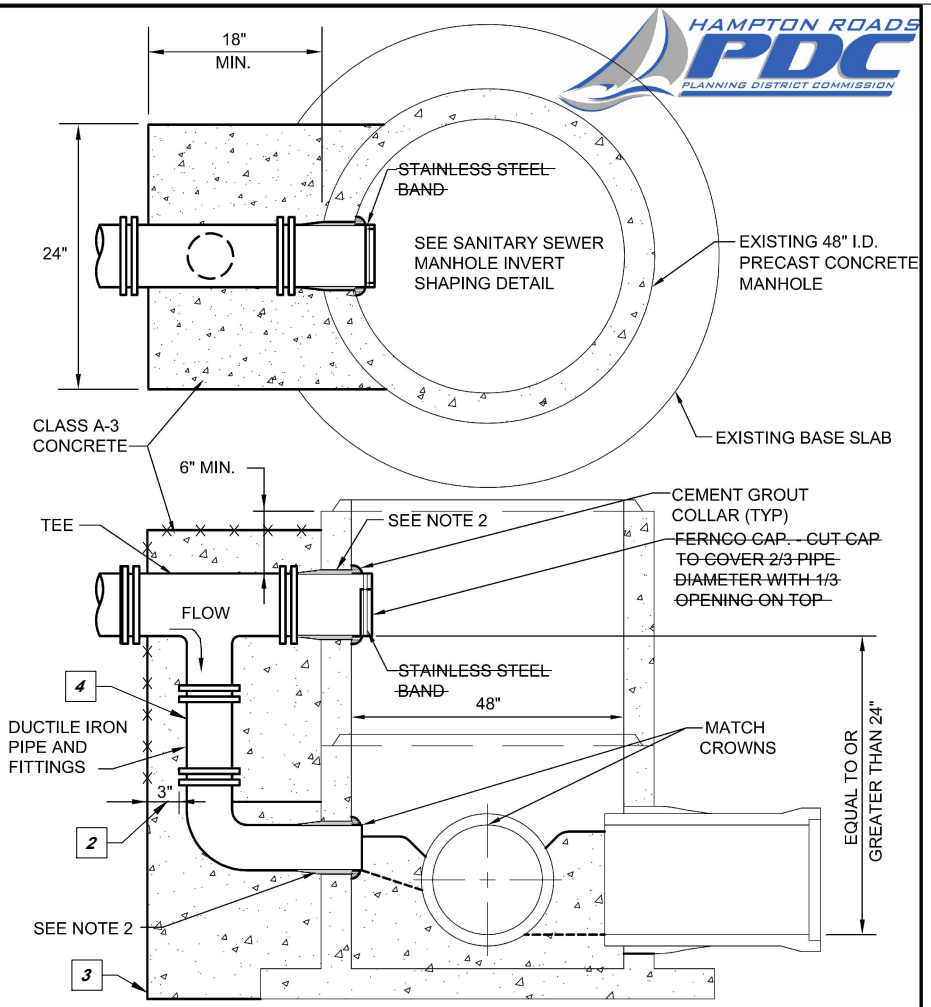

NOTES:

1. PLACEMENT OF DROP NOT TO CONFLICT WITH MANHOLE STEPS.
2. PROVIDE FLEXIBLE BOOT CONNECTION PER SPECIFICATION SECTION 200.

SANITARY SEWER EXTERIOR DROP MANHOLE
~~(FOR EXISTING MANHOLE ONLY)~~

NOT TO SCALE

REFERENCE	CATEGORY	DATE	SHEET No.	DETAIL No.
200,802	SANITARY SYSTEMS	6/16	1 OF 1	SS_05

VIRGINIA BEACH MODIFICATIONS TO REGIONAL STANDARDS SIXTH EDITION

1 USE OF THIS DETAIL REQUIRES APPROVAL BY PUBLIC UTILITIES.

2 LIMIT CONCRETE ENCASEMENT TO BELOW ELBOW JOINT. DO NOT ENCASE TEE OR DROP PIPE

3 12" OF STONE BASE UNDER NEW CONCRETE.

4 DROP TO BE SAME SIZE AS LATERAL/MAIN (TEE).

Public Utilities

DATE: 10/2023

CITY OF VIRGINIA BEACH - PUBLIC UTILITIES
STANDARD DETAILS

SANITARY SEWER EXTERIOR DROP MANHOLE

SCALE: NOT TO SCALE

DRAWING NO. PU 4.10

SHEET NO. 1 OF 1

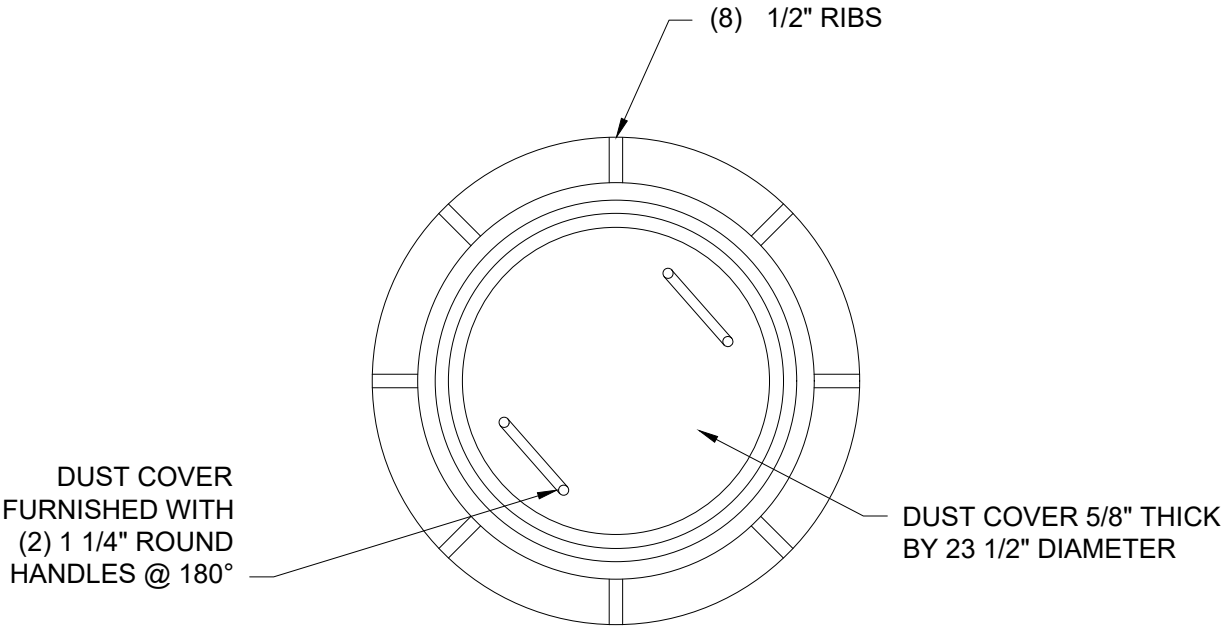

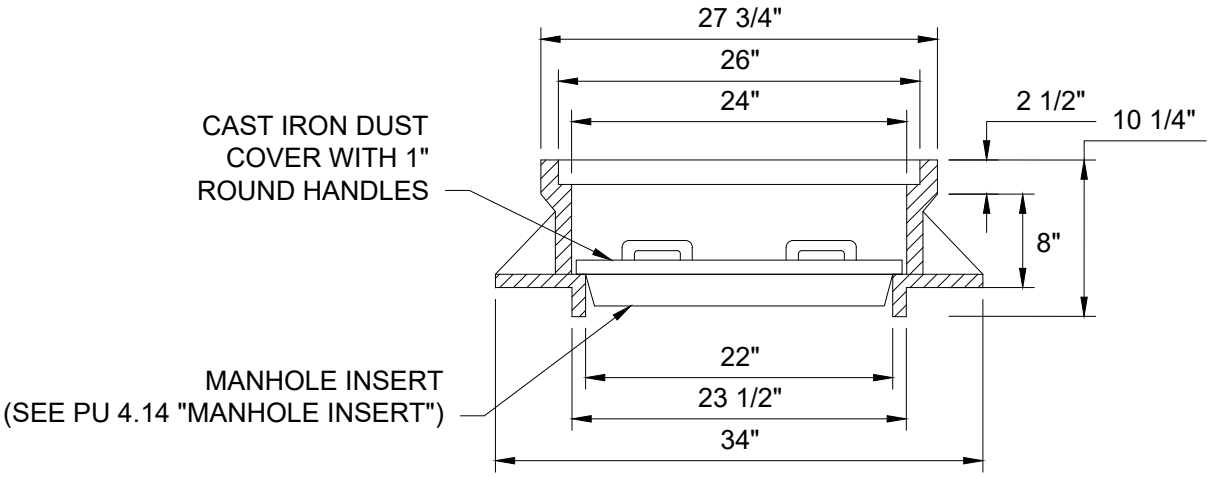

NOTES:

1. ALL GRAY IRON CASTINGS SHALL CONFORM TO ASTM A-48, CLASS 30.
2. ALL CASTING DIMENSIONS SHALL HAVE A TOLERANCE OF 1/8"±
3. MANHOLE INSERTS ARE REQUIRED TO BE INSTALLED UNDER DUST COVER IN MANHOLES ON NEW CONSTRUCTION ON PUBLIC AND PRIVATE PROPERTY.

VB Public Utilities	CITY OF VIRGINIA BEACH - PUBLIC UTILITIES STANDARD DETAILS	SCALE: NOT TO SCALE
		DRAWING NO. PU 4.11
DATE: 10/2023	MANHOLE FRAME	SHEET NO. 1 OF 1

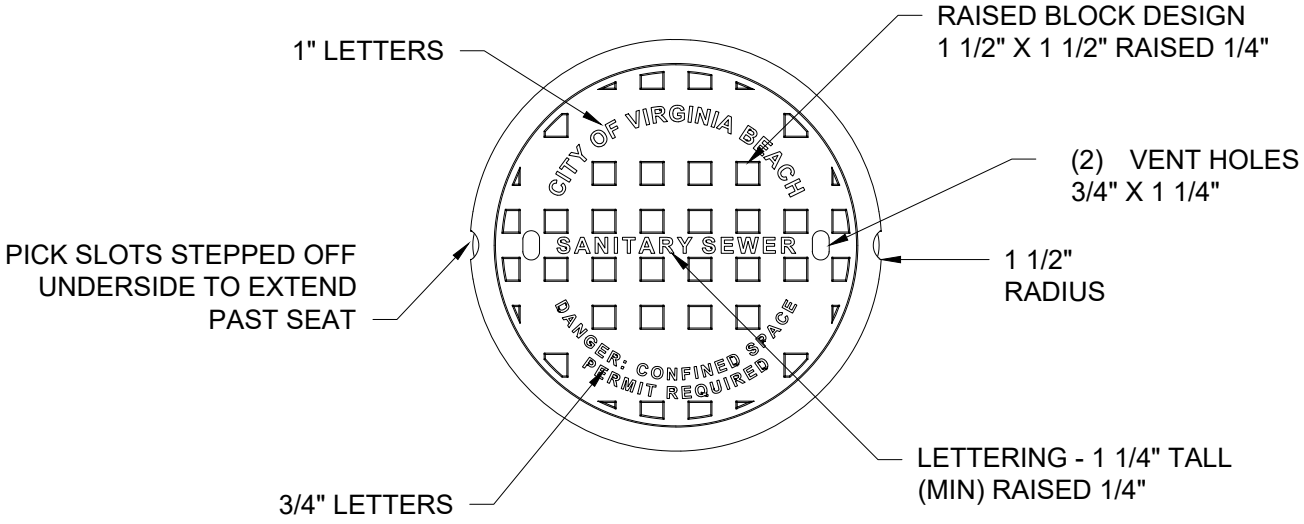

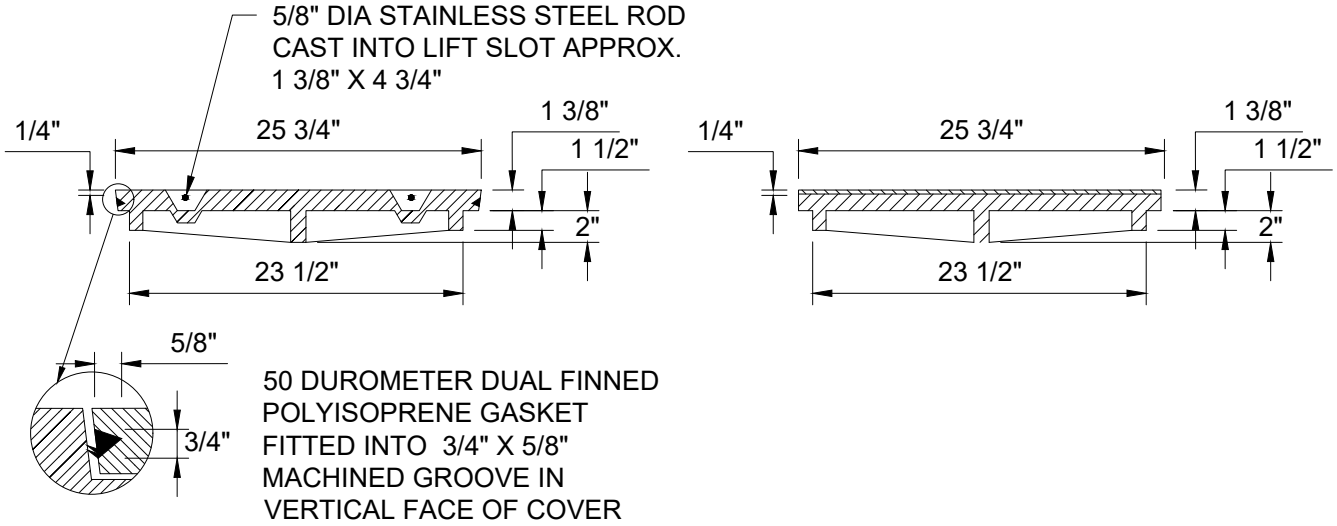

Public Utilities DATE: 10/2023	CITY OF VIRGINIA BEACH - PUBLIC UTILITIES STANDARD DETAILS	SCALE: NOT TO SCALE
		DRAWING NO. PU 4.12
	MANHOLE COVER	SHEET NO. 1 OF 1

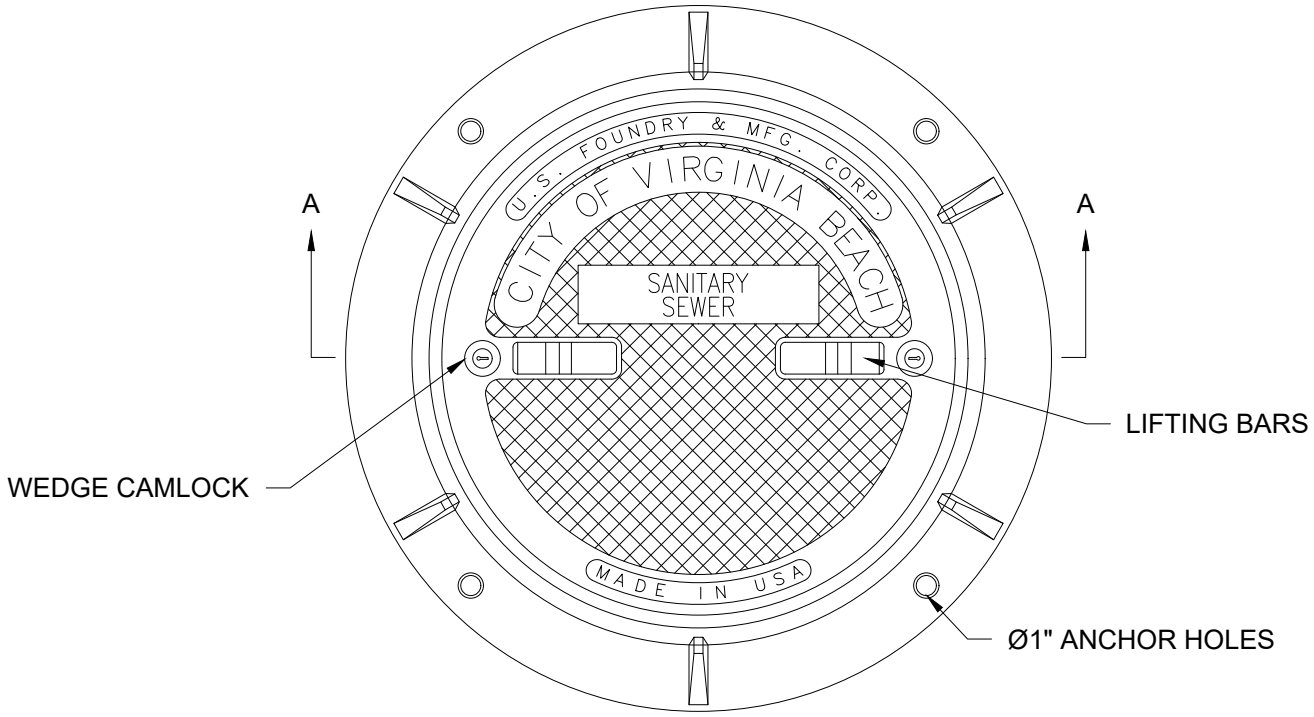

PLAN

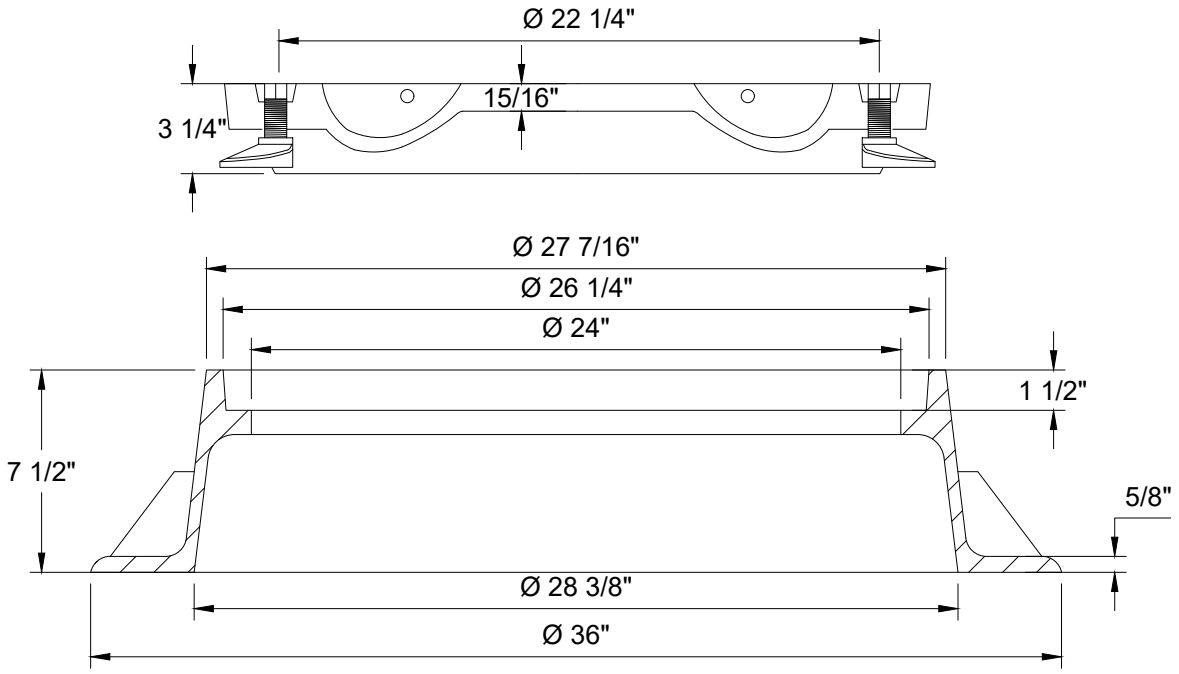

SECTION AA

NOTES:

1. USE OF A PENTA HEAD SOCKET TOOL FOR CAM LOCK REQUIRED.

Public Utilities DATE: 10/2023	CITY OF VIRGINIA BEACH - PUBLIC UTILITIES STANDARD DETAILS	SCALE: NOT TO SCALE
	LOCKING MANHOLE COVER AND FRAME	DRAWING NO. PU 4.13 SHEET NO. 1 OF 1

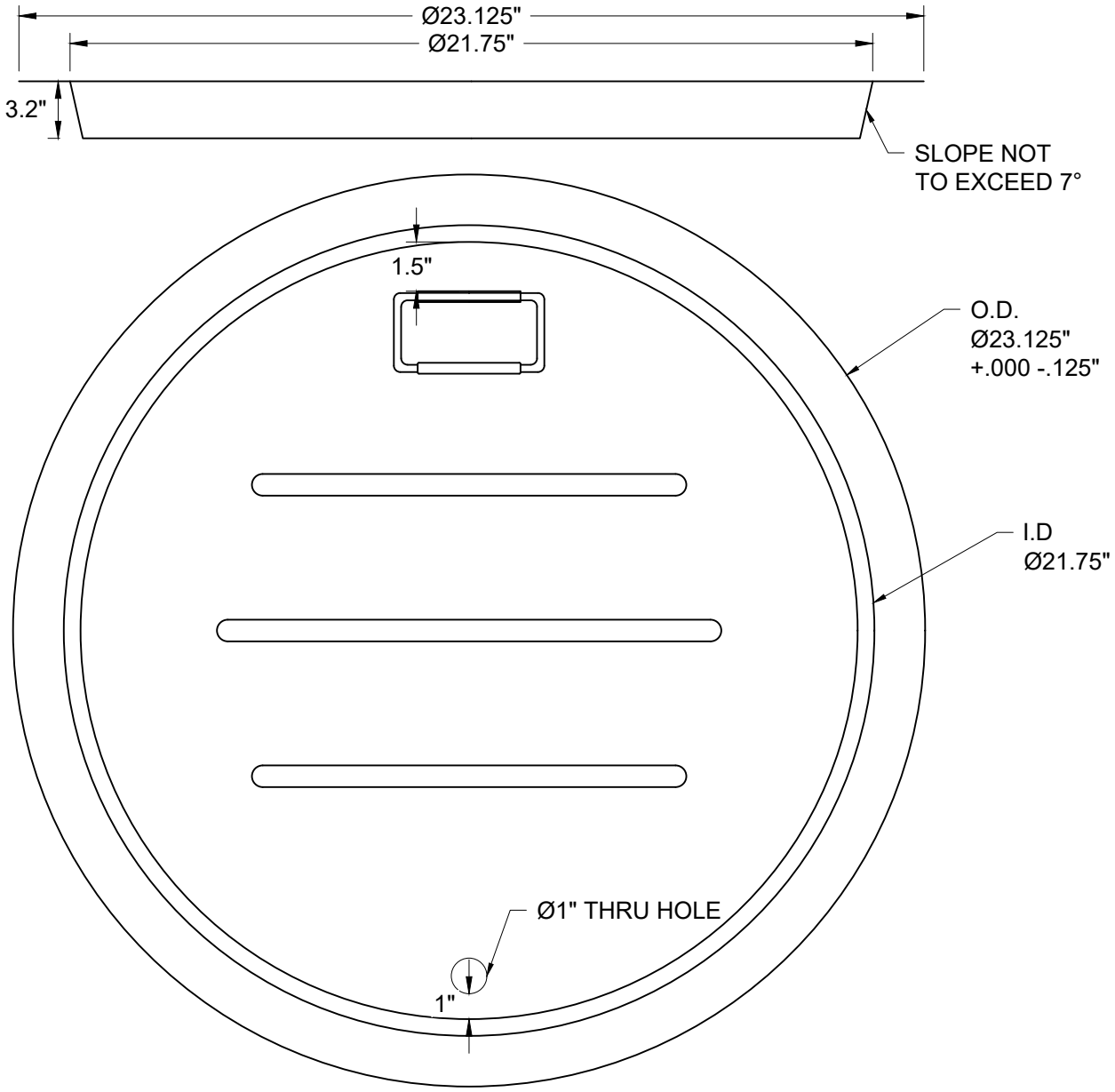

NOTE:

1 PRODUCT MUST BE FROM PUBLIC UTILITIES APPROVED PRODUCTS LIST.

2 INSERT SHALL BE FUNISHED WITH A "D" TYPE SPRING LOADED HANDLE WITH A RUBBER COATED GRIP. HANDLE PLATE SHALL BE WELDED TO THE BODY OF THE INSERT WITH HIGH-GRADE STAINLESS STEEL CONTINOUS FILLET TYPE WELD.

3 INSERT SHALL BE FURNISHED WITH A NITRILE RUBBER SELF SEALING GAS PRESSURE RELIEF VALVE. TO BE INSERTED INTO THE THRU HOLE

4 INSERT SHALL BE FURNISHED WITH A GASKET MADE OF CLOSE CELL NEOPRENE. TO BE INSTALLED ON THE BOTTOM OF THE OUTER RIM OF THE INSERT.

5 MANHOLE INSERT TO BE LOCATED UNDER DUST COVER.

Public Utilities	CITY OF VIRGINIA BEACH - PUBLIC UTILITIES STANDARD DETAILS	SCALE: NOT TO SCALE
		DRAWING NO. PU 4.14
DATE: 10/2023	MANHOLE INSERT	SHEET NO. 1 OF 1

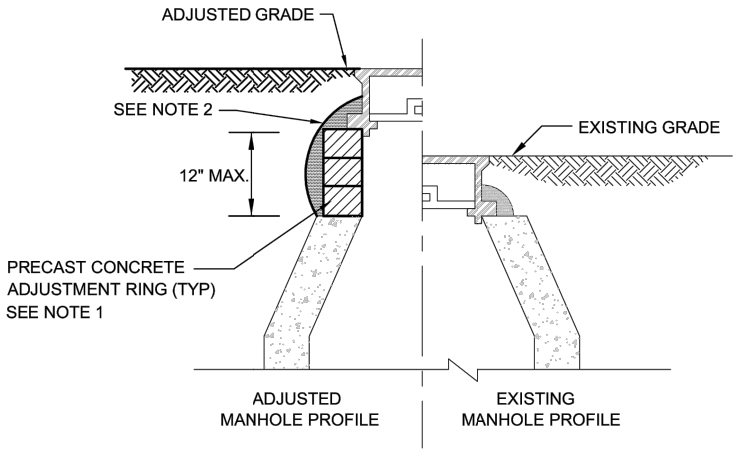

NOTES:

1. RINGS TO BE COATED AND SEALED SMOOTH ON ALL INSIDE SURFACES, 3/8" THICK (MIN.) WITH HYDRAULIC CEMENT HIGH STRENGTH GROUT.
2. MANHOLE CASTING AND ADJUSTMENT RINGS TO BE SET AND IMBEDDED IN BUTYL JOINT MATERIAL AND CAPPED WITH HYDRAULIC CEMENT GROUT OVER FRAME FLANGE, ADJUSTMENT RINGS AND SECTION.
3. FOUNDATION, FOOTING PAD, LOWEST BARREL SECTION OF MANHOLE AND PIPES SHALL REMAIN UNDISTURBED.

SANITARY SEWER MANHOLE ADJUSTMENT

NOT TO SCALE

REFERENCE	CATEGORY	DATE	SHEET No.	DETAIL No.
200,802	SANITARY SYSTEMS	6/16	1 OF 1	SS_06

VIRGINIA BEACH MODIFICATIONS TO REGIONAL STANDARDS SIXTH EDITION

1. HDPE ADJUSTMENT RINGS MAY BE SUBSTITUTED FOR THE CONCRETE ADJUSTMENT RINGS.
2. ADJUSTMENT RINGS ARE NOT ALLOWED FOR NEW MANHOLES.

Public Utilities

DATE: 10/2023

CITY OF VIRGINIA BEACH - PUBLIC UTILITIES
STANDARD DETAILS

SANITARY SEWER MANHOLE ADJUSTMENT

SCALE: NOT TO SCALE

DRAWING NO. PU 4.15

SHEET NO. 1 OF 1

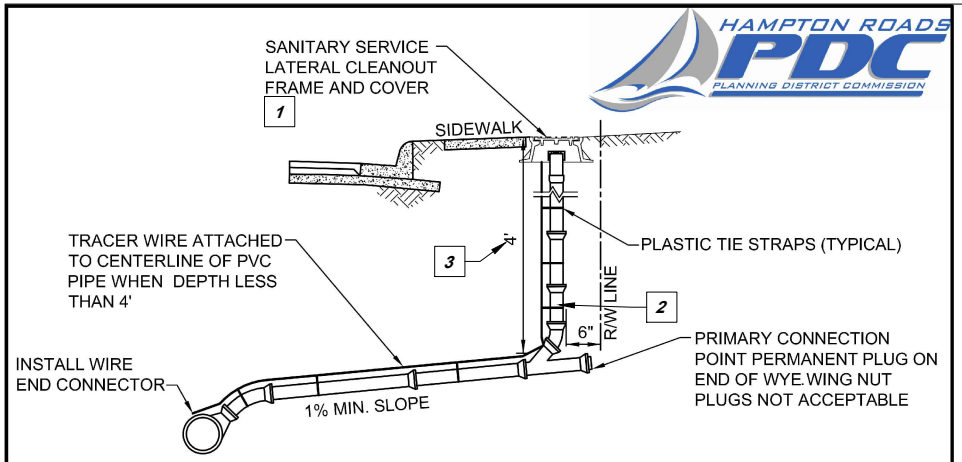

SHALLOW DETAIL

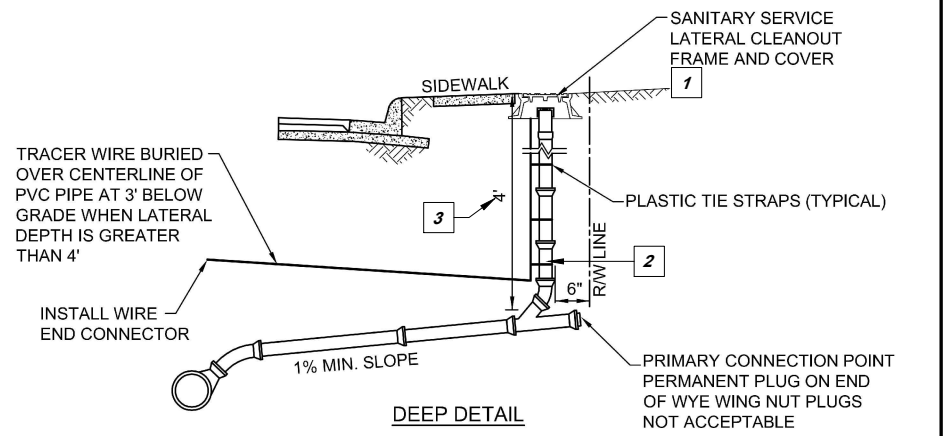

DEEP DETAIL

NOTE:

INSTALL DETECTABLE WARNING TAPE CONTINUOUSLY FROM THE MAIN TO THE RIGHT OF WAY LINE DIRECTLY ON TOP OF PVC LATERAL, ATTACHED EVERY 10 FEET.

SANITARY SEWER SERVICE CONNECTION-ALTERNATE

NOT TO SCALE

REFERENCE	CATEGORY	DATE	SHEET No.	DETAIL No.
200,802	SANITARY SYSTEMS	6/16	1 OF 2	SS_20

VIRGINIA BEACH MODIFICATIONS TO REGIONAL STANDARDS SIXTH EDITION

1. FOR CITY OF VIRGINIA BEACH PROJECTS, USE PU 4.17 "LATERAL CLEANOUT". FOR VDOT PROJECTS, USE CLEANOUT AS SHOWN ON THIS DETAIL.

2. INSERT A WYE TO ALLOW FOR A SECONDARY CONNECTION POINT. (BY PLUMBING CONTRACTOR)

3. 4' DEPTH UNLESS ADDITIONAL DEPTH IS NECESSARY TO PROVIDE SERVICE. IF 4' OF COVER CANNOT BE PROVIDED MAXIMIZE COVER TO EXTENT POSSIBLE.

4. NEWLY CONSTRUCTED LATERALS SHALL BE CCTV INSPECTED IN ACCORDANCE WITH PUBLIC UTILITIES STANDARD OPERATING POLICY PU SOP/ENG 1185.

VIRGINIA BEACH MODIFICATIONS TO REGIONAL STANDARDS SIXTH EDITION

NOTES:

1. TYPICAL LATERAL LAYOUT - (UTILITY CONTRACTOR)
   SHALL ONLY UTILIZE THE PRIMARY CONNECTION POINT WHEN TYING TO AN EXISTING LATERAL. THE CONNECTION POINT TO THE PRIVATE LATERAL AND TO THE HOUSE LATERAL CLEANOUT SHALL BE MADE WITH SOLID SLEEVES. FERNCO COUPLINGS OR EQUIVALENTS ARE NOT PERMITTED ON THE HOUSE LATERAL CONNECTION OR AT THE CONNECTION POINT TO THE PRIVATE LATERAL, UNLESS THE PRIVATE LATERAL IS VCP (VITRIFIED CLAY PIPE), OR ORANGEBURG PIPE (BITUMINIZED FIBER SEWER PIPE). CLEANOUT RISER ASSEMBLY AND FITTING SHALL BE SAME MATERIAL AS THE SEWER LATERAL (P.V.C. ASTM D-3034 SCHEDULE 26, OR AWWA C900-CLASS 150 (DR-18). D.I.-ANSI/AWWA C150/A21.50-91 CLASS 52).

2. TYPICAL LATERAL LAYOUT - (PLUMBING CONTRACTOR)
   THE PLUMBER MAY UTILIZE THE PRIMARY CONNECTION POINT, OR ~~INSTALL AND UTILIZE~~ THE SECONDARY CONNECTION POINT. WHEN INSTALLING THE SECONDARY CONNECTION POINT, THE LATERAL RISER ASSEMBLY, HOUSE LATERAL CLEANOUT AND TRACER WIRE SHALL BE REINSTALLED BY PLUMBING CONTRACTOR PRIOR TO OCCUPANCY. CLEANOUT RISER ASSEMBLY, AND FITTING SHALL BE SAME MATERIAL AS THE SEWER LATERAL (P.V.C. ASTM D-3034 SCHEDULE 26, OR AWWA C900-CLASS150 (DR-18).D.I.-ANSI/AWWA C150/A21.50-91 CLASS 52. ALL CLEANOUT RISER ASSEMBLY FITTING CONNECTIONS AND THE CONNECTION POINT TO THE PRIVATE LATERAL SHALL BE MADE WITH SOLID SLEEVES. FERNCO COUPLING OR EQUIVALENTS ARE NOT PERMITTED ON THE CLEANOUT RISER ASSEMBLY, THE RISER FITTINGS, AND AT THE CONNECTION POINT TO THE PRIVATE LATERAL (RIGHT-OF-WAY LINE OR EASEMENT LIMITS).

3. TYPICAL LATERAL LAYOUT
   CLEANOUT RISER ASSEMBLY, HOUSE LATERAL CLEANOUT AND TRACER WIRE SHALL BE INSTALLED PRIOR TO FINAL INSPECTION/ACCEPTANCE. LOCATION OF WYE AND CLEANOUT MAY BE VARIED BY INSPECTOR IF NECESSARY DUE TO UNUSUAL DEPTH OR CONDITIONS. ~~MINIMUM~~ COVER OF 4.0 FEET REQUIRED UNLESS MORE DEPTH IS REQUIRED FOR SERVICE. PERMANENT PLUG SHALL BE INSTALLED IN THE END OF THE CLEANOUT WYE (WING NUT PLUGS ARE NOT ACCEPTABLE).

4. LATERAL SHALL BE SAME MATERIAL AS SEWER MAIN DUCTILE IRON (D.I.), OR POLYVINYLCHLORIDE (P.V.C.). D.I. SHALL BE ANSI/AWWA C150/A21.50-91 CLASS 52. P.V.C. SHALL BE ASTM D-3034 SCHEDULE 26, OR AWWA C900-CLASS 150 (DR-18).

5. TRACER WIRE SHALL BE AWG 10 SOLID COPPER WIRE W/POLYETHYLENE INSULATION. THE TRACER WIRE SHALL BE ATTACHED TO THE LATERAL PIPE WHEN THE DEPTH IS NO GREATER THAN 4.0 FEET (PVC ONLY). THE WIRE SHALL BE BURIED OVER THE CENTERLINE OF THE LATERAL PIPE AT 3.0 FEET BELOW GRADE WHEN THE LATERAL DEPTH IS GREATER THAN 4.0 FEET (PVC ONLY).

   WHEN THE TRACER WIRE IS ATTACHED TO THE LATERAL AND RISER ASSEMBLY, IT WILL BE FASTENED WITH TIE STRAPS OR APPROVED EQUAL.

   ~~INSTALL DETECTABLE WARNING TAPE CONTINUOUSLY FROM THE MAIN TO THE RIGHT OF WAY LINE DIRECTLY ON TOP OF PVC LATERAL, ATTACHED EVERY 10 FEET.~~

SANITARY SEWER SERVICE CONNECTION-~~ALTERNATE~~

NOT TO SCALE

REFERENCE	CATEGORY	DATE	SHEET No.	DETAIL No.
200,802	SANITARY SYSTEMS	6/16	2 OF 2	SS_20

Public Utilities

DATE: 10/2023

CITY OF VIRGINIA BEACH - PUBLIC UTILITIES
STANDARD DETAILS

SANITARY SEWER SERVICE CONNECTION

SCALE: NOT TO SCALE

DRAWING NO. PU 4.16

SHEET NO. 2 OF 2

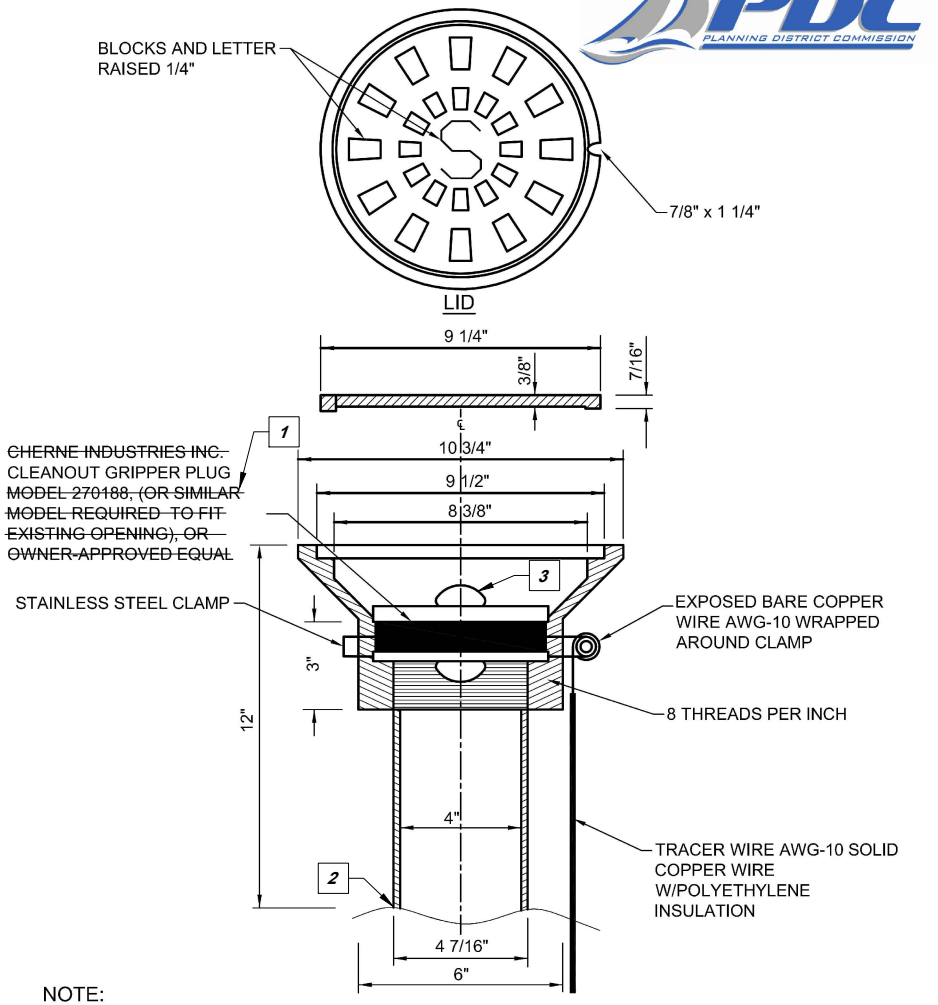

NOTE:

THE TRACER WIRE POLYETHYLENE INSULATION SHALL ONLY BE REMOVED WHERE THE TRACER WIRE IS WRAPPED AROUND THE STAINLESS STEEL CLAMP

~~HOUSE~~ LATERAL CLEANOUT ~~ALTERNATE~~

NOT TO SCALE

REFERENCE	CATEGORY	DATE	SHEET No.	DETAIL No.
200,802	SANITARY SYSTEMS	6/16	1 OF 1	SS_21

VIRGINIA BEACH MODIFICATIONS TO REGIONAL STANDARDS SIXTH EDITION

1 AS INDICATED ON THE PUBLIC UTILITIES APPROVED PRODUCTS LIST

2 CONNECT TO RISER PIPE WITH SOLID SLEEVE

3 HEX NUT

Public Utilities

DATE: 10/2023

CITY OF VIRGINIA BEACH - PUBLIC UTILITIES
STANDARD DETAILS

LATERAL CLEANOUT

SCALE: NOT TO SCALE

DRAWING NO. PU 4.17

SHEET NO. 1 OF 1

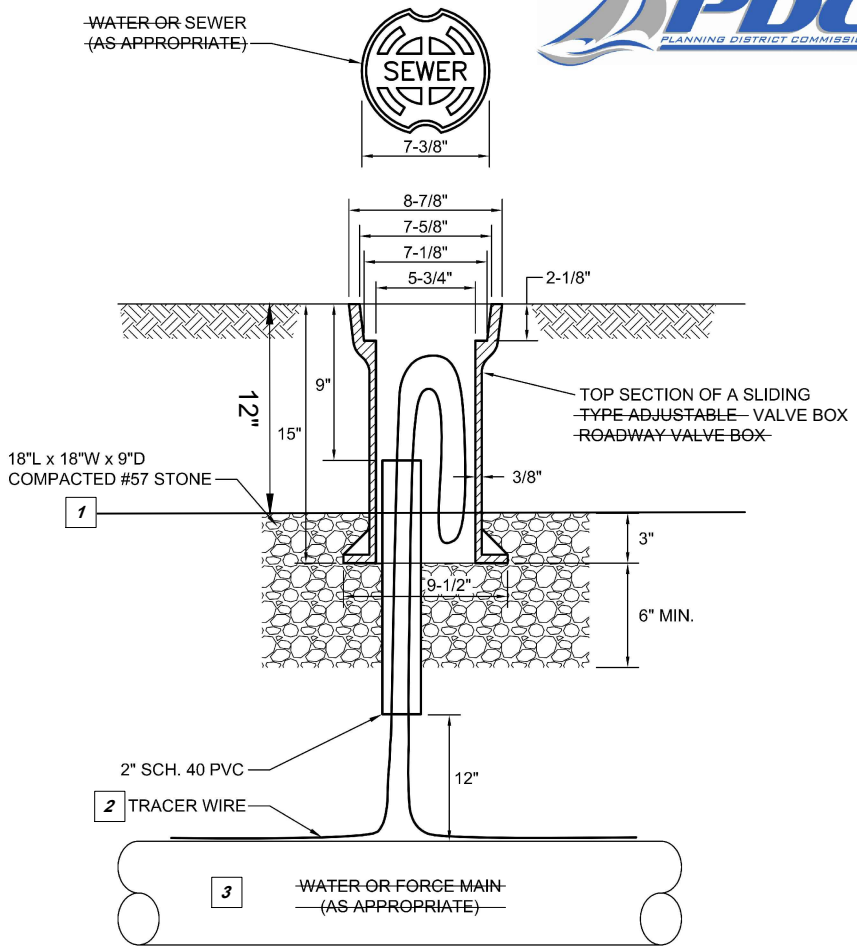

NOTES:

1. WIRE SHALL BE LOOPED THROUGH THE VALVE ~~VAULT~~ BOX AND EXTEND 24 INCHES ABOVE FINISHED GRADE AND COILED BACK INTO THE VALVE ~~VAULT.~~ BOX

TYPICAL TRACER WIRE BOX INSTALLATION

NOT TO SCALE

REFERENCE	CATEGORY	DATE	SHEET No.	DETAIL No.
200, 801, 803	WATER & SANITARY	6/16	1 OF 1	WS_08

VIRGINIA BEACH MODIFICATIONS TO REGIONAL STANDARDS SIXTH EDITION

1 WARNING TAPE SHALL BE 12" DEEP.

2 TRACER WIRE SHALL BE AWG 10 SOLID COPPER WIRE WITH POLYETHYLENE INSULATION. THE TRACER WIRE SHALL BE ATTACHED TO THE LATERAL PIPE WHEN THE DEPTH IS NO GREATER THAN 4.0 FEET (PVC ONLY). THE WIRE SHALL BE BURIED OVER THE CENTERLINE OF THE LATERAL PIPE AT 3.0 FEET BELOW GRADE WHEN THE LATERAL DEPTH IS GREATER THAN 4.0 FEET (PVC ONLY). WHEN THE TRACER WIRE IS ATTACHED TO THE LATERAL AND RISER ASSEMBLY, WITH BE FASTENED WITH TIE TRAPS OR APPROVED EQUAL.

3 VACUUM SEWER MAIN AND LATERAL.

Public Utilities

DATE: 10/2023

CITY OF VIRGINIA BEACH - PUBLIC UTILITIES
STANDARD DETAILS

TYPICAL TRACER WIRE BOX INSTALLATION

SCALE: NOT TO SCALE

DRAWING NO. PU 5.1

SHEET NO. 1 OF 1

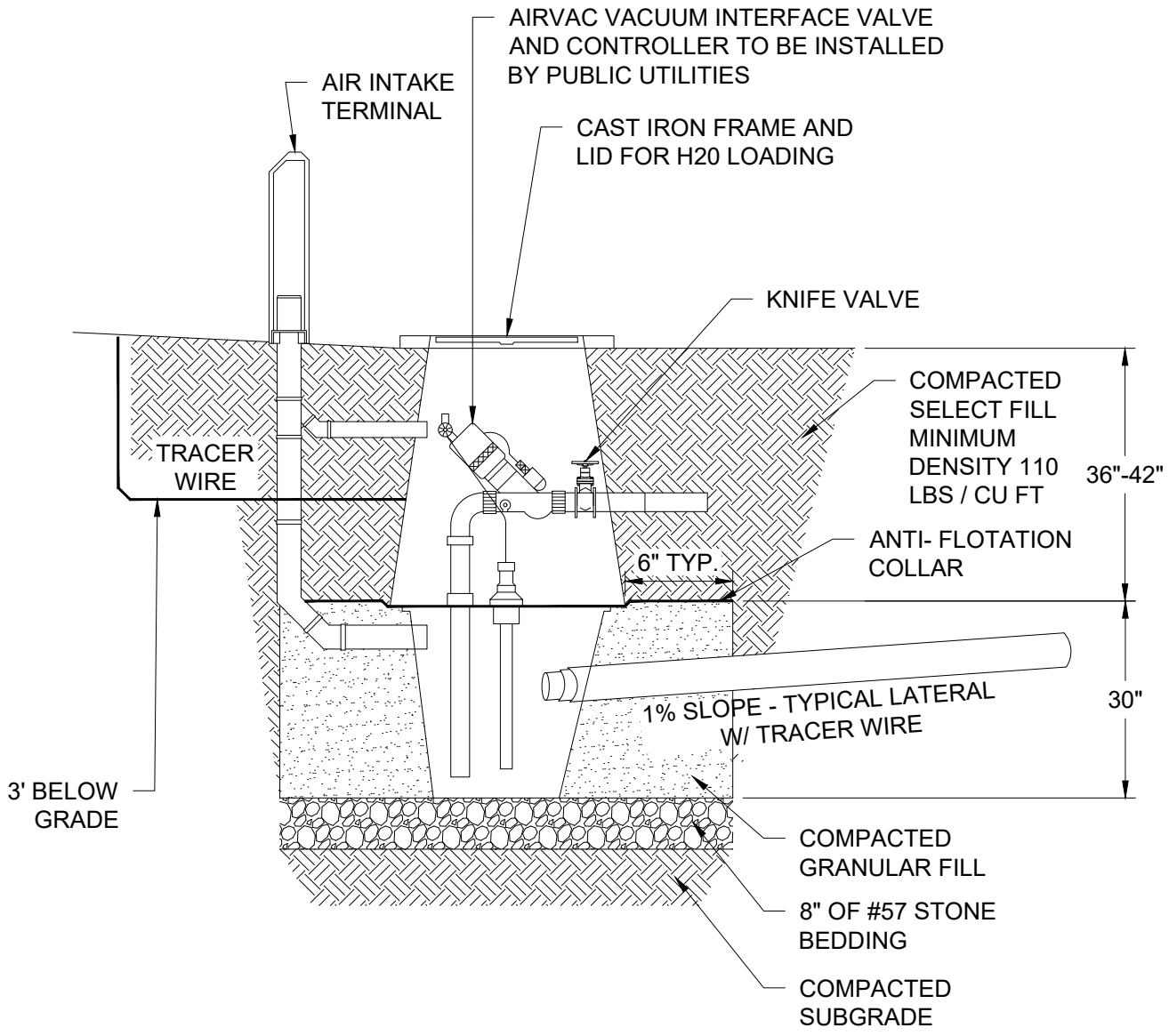

NOTE:

1. SEE VACUUM SYSTEM CONNECTION NOTES 5.6 "VACUUM SYSTEM CONNECTION NOTES".

Public Utilities	CITY OF VIRGINIA BEACH - PUBLIC UTILITIES STANDARD DETAILS	SCALE: NOT TO SCALE
		DRAWING NO. PU 5.2
DATE: 10/2023	VACUUM SYSTEM VALVE PIT	SHEET NO. 1 OF 1

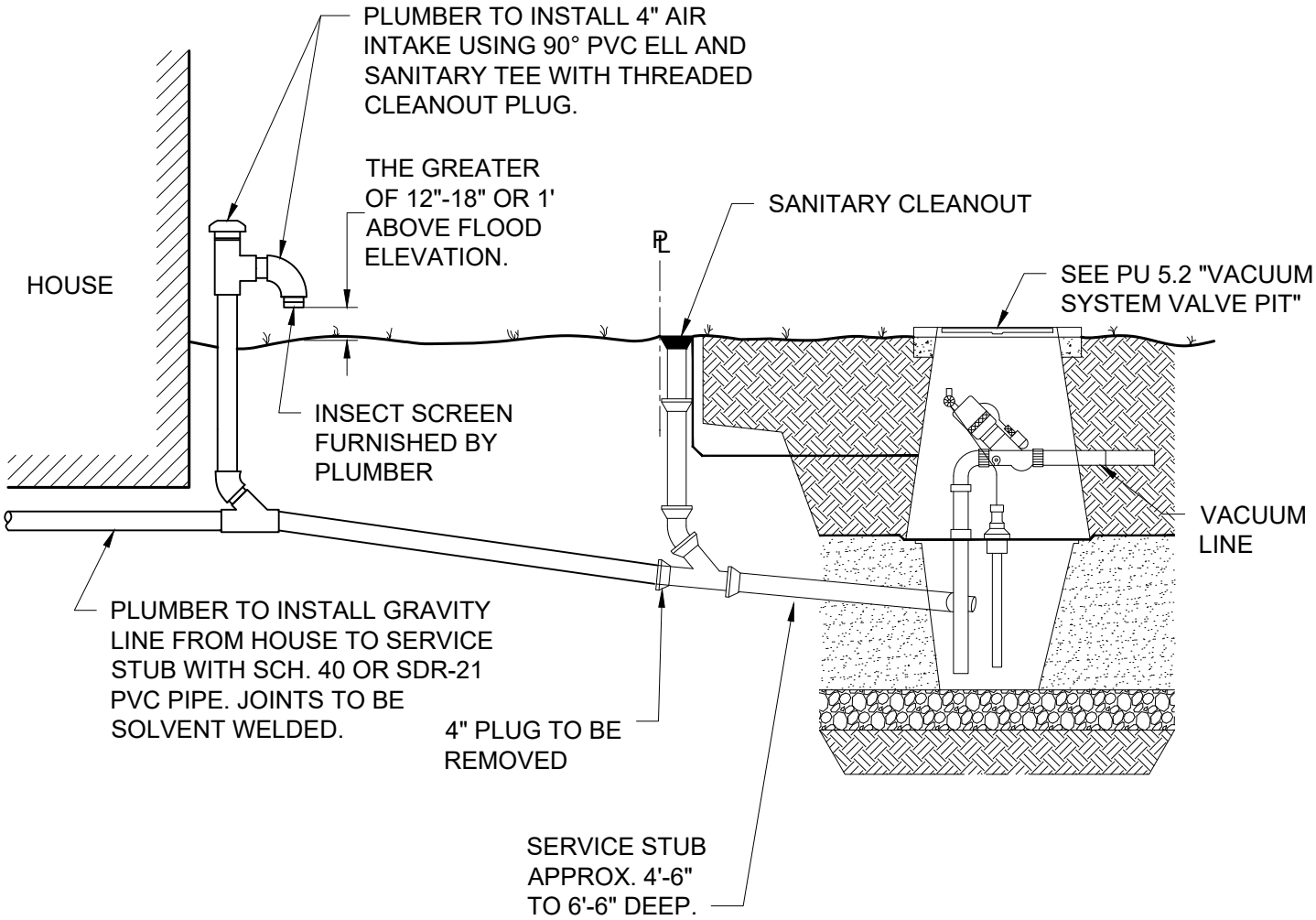

NOTES:

1. SEE VACUUM SYSTEM CONNECTION NOTES PU 5.5 "VACUUM SYSTEM VALVE PIT PLAN VIEW" & 5.6 "VACUUM SYSTEM CONNECTION NOTES".

2. LOCATION OF AIR INTAKE SHALL BE PER APPROVED SITE PLAN.

3. FOR VALVE PITS WITH DEDICATED AIR INTAKE TERMINAL ELIMINATE THE AIR INTAKE ASSEMBLY.

VB Public Utilities	CITY OF VIRGINIA BEACH - PUBLIC UTILITIES STANDARD DETAILS	SCALE: NOT TO SCALE
	SINGLE FAMILY GRAVITY CONNECTION TO VACUUM VALVE PIT LATERAL WITHOUT DEDICATED AIR INTAKE TERMINAL	DRAWING NO. PU 5.3
DATE: 10/2023		SHEET NO. 1 OF 1

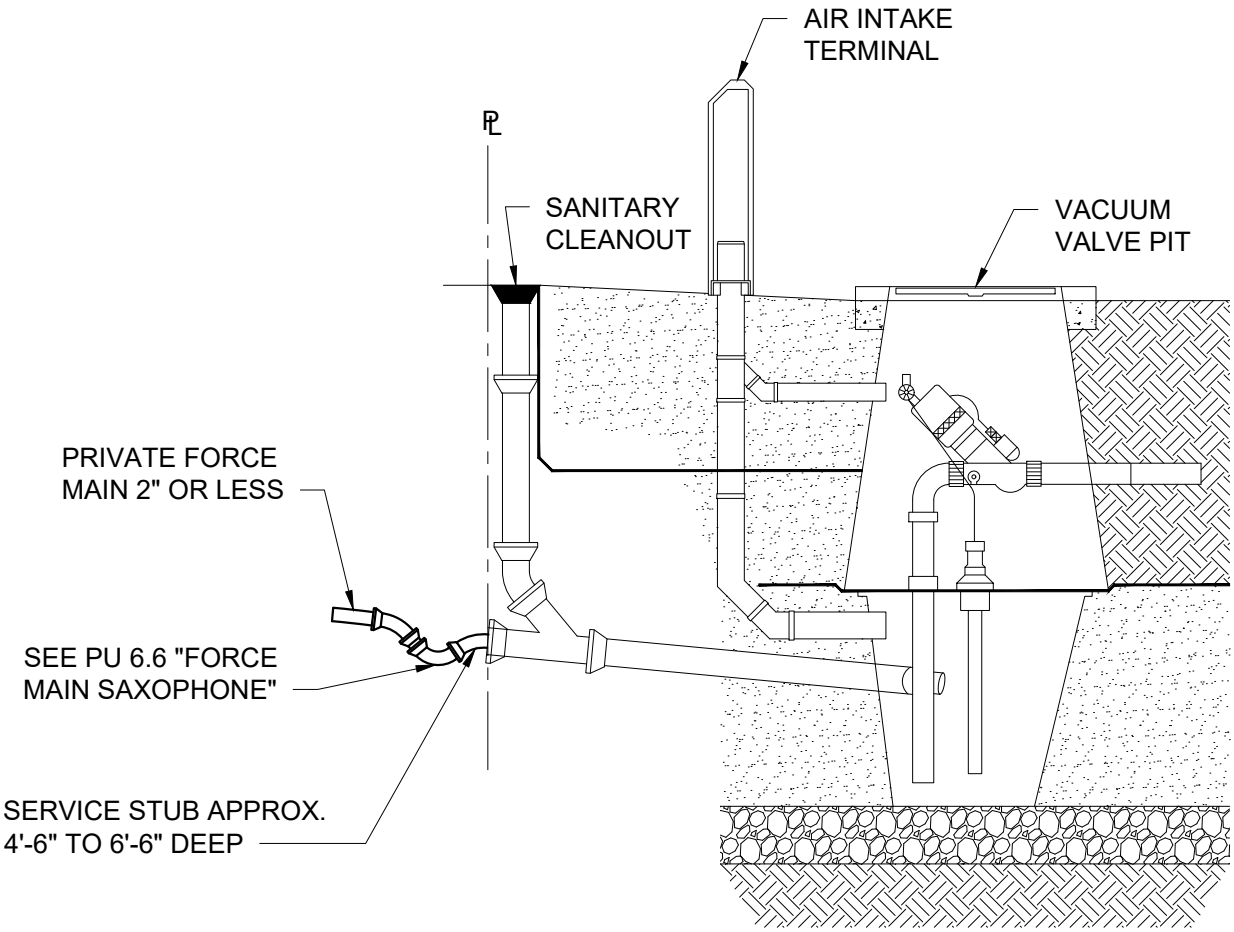

NOTES:

1. SEE PU 5.6 "VACUUM SYSTEM CONNECTION NOTES".

2. WHERE A SINGLE FAMILY PRIVATE FORCE MAIN IS CONNECTED TO A PIT NO OTHER CONNECTIONS ARE PERMITTED.

Public Utilities	CITY OF VIRGINIA BEACH - PUBLIC UTILITIES STANDARD DETAILS	SCALE: NOT TO SCALE
		DRAWING NO. PU 5.4
DATE: 10/2023	SINGLE FAMILY PRIVATE FORCE MAIN CONNECTION TO VACUUM VALVE PIT	SHEET NO. 1 OF 1

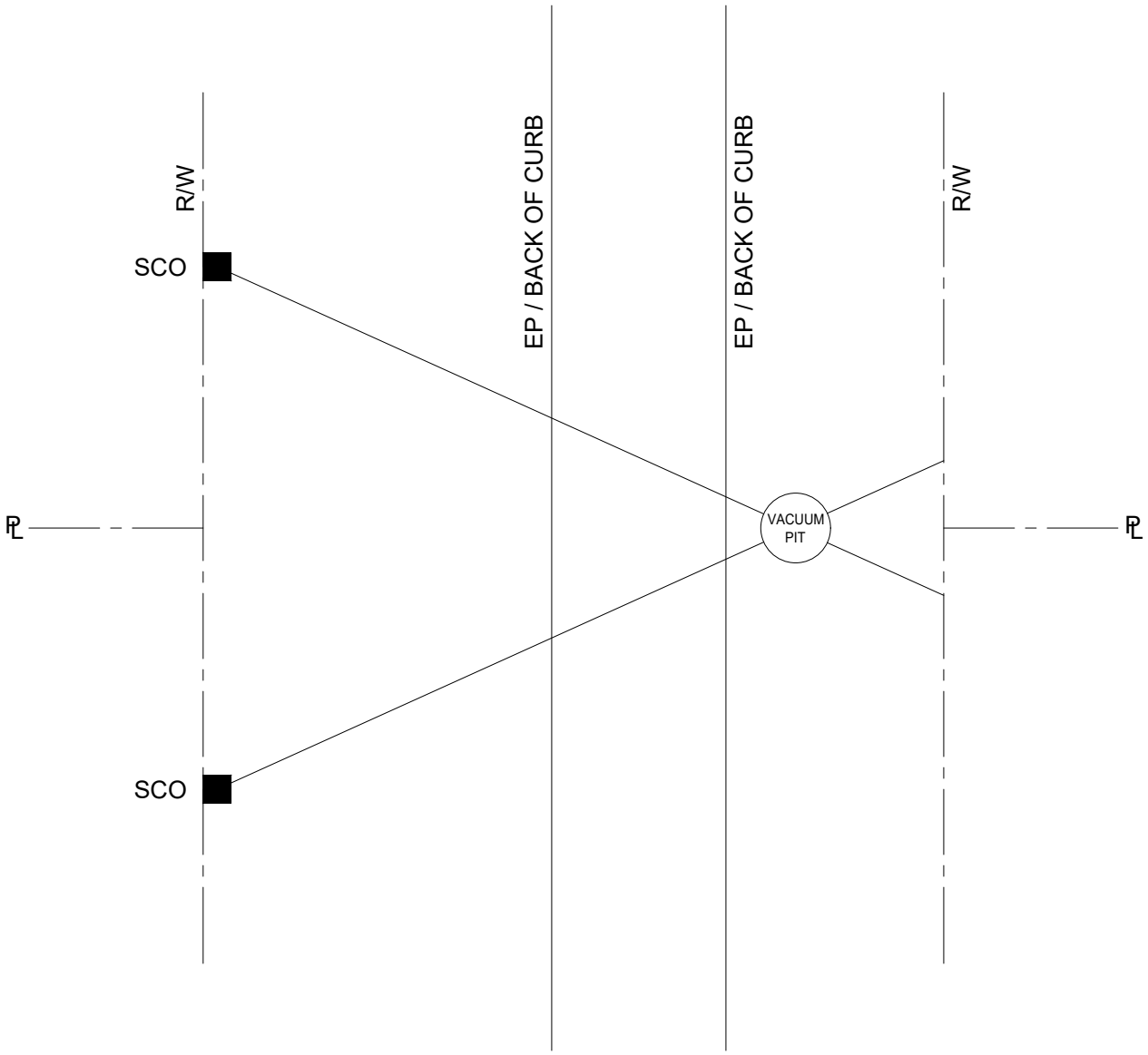

PLAN VIEW

NOTES:

1. LATERALS CAN ONLY ENTER VALVE PIT AT DESIGNATED LOCATIONS.

2. DO NOT INSTALL CLEANOUTS ON LATERALS LOCATED ON THE SAME SIDE OF THE PAVEMENT AS THE VALVE PIT.

3. SERVICE CONNECTIONS WILL BE LIMITED TO 3 PER VACUUM SYSTEM VALVE PIT WITH DEDICATED AIR INTAKE.

Public Utilities	CITY OF VIRGINIA BEACH - PUBLIC UTILITIES STANDARD DETAILS	SCALE: NOT TO SCALE
		DRAWING NO. PU 5.5
DATE: 10/2023	VACUUM SYSTEM VALVE PIT PLAN VIEW	SHEET NO. 1 OF 1

VACUUM SYSTEM COLLECTION NOTE:

1. PLUMBERS CONNECTION WILL BE MADE ONLY TO THE PUBLIC LATERAL STUB AND NOT TO PIT ITSELF.

2. SERVICE CONNECTIONS WILL BE LIMITED TO 3 PER VACUUM SYSTEM VALVE PIT WITH DEDICATED AIR INTAKE.

3. CONNECTION TO THE VACUUM SEWER SYSTEM REQUIRES AN AIR INTAKE ASSEMBLY TO BE CONSTRUCTED ON THE PRIVATE PROPERTY PLUMBING AS SHOWN ON PU 5.3 "SINGLE FAMILY GRAVITY CONNECTION TO VACUUM VALVE PIT LATERAL WITHOUT DEDICATED AIR INTAKE TERMINAL" AND PU 5.4 "SINGLE FAMILY PRIVATE FORCE MAIN CONNECTION TO VACUUM VALVE PIT". THE AIR INTAKE ASSEMBLY IS REQUIRED FOR CONNECTION TO EXISTING VACUUM SEWER PITS THAT DO NOT HAVE A DEDICATED AIR INTAKE TERMINAL.

4. THE AIR INTAKE MUST HAVE AN INSECT SCREEN THAT MUST BE OBTAINED FROM THE CITY'S PERMITS AND INSPECTIONS OFFICE. NO OTHER INSECT SCREENS WILL BE ACCEPTED.

5. THE PRIVATE PROPERTY LATERAL MUST BE CONSTRUCTED OF SCH 40 PVC OR SDR-21 PVC. ALL JOINTS SHALL BE SOLVENT WELDED.

6. THE DEPTH OF THE CONNECTION POINT IS APPROXIMATELY 4'-6" TO 6'-6" BELOW EXISTING GRADE.

7. NO GROUNDWATER, SAND, STONE, OR DEBRIS OF ANY KIND SHALL BE ALLOWED TO ENTER THE GRAVITY LINE DURING INSTALLATION FROM THE BUILDING TO THE VACUUM VALVE PIT. PUBLIC UTILITIES WILL INSPECT THE VALVE PIT FOR FOREIGN MATERIAL PRIOR TO ACTIVATING THE VALVE PIT. IF FOREIGN MATERIAL IS DETECTED IN THE VALVE PIT, IT MUST BE REMOVED BY CONTRACTOR BEFORE THE VALVE PIT CAN BE ACTIVATED.

8. THE PLUMBER SHALL NOT DIRECT ANY SEWAGE TO THE VALVE PIT UNTIL THE INTERFACE VALVE AND CONTROLLER HAS BEEN INSTALLED BY THE CITY AND THE VALVE PIT HAS BEEN RELEASED BY PUBLIC UTILITIES INSPECTIONS.

9. CLOSE COORDINATION IS REQUIRED BETWEEN THE PLUMBER, PERMITS AND INSPECTIONS, AND PUBLIC UTILITIES OPERATIONS FOR CONNECTION OF EXISTING STRUCTURES TO THE VACUUM SEWER SYSTEM.

10. QUESTIONS CAN BE DIRECTED TO THE PLUMBING PERMITS OFFICE AT (757) 385-4211 OR PUBLIC UTILITIES OPERATIONS AT (757) 385-1400.

11. TRACER WIRE SHALL BE AWG 10 SOLID COPPER WIRE WITH POLYETHYLENE INSULATION. THE TRACER WIRE SHALL BE ATTACHED TO THE LATERAL PIPE WHEN THE DEPTH IS NO GREATER THAN 4.0 FEET (PVC ONLY). THE WIRE SHALL BE BURIED OVER THE CENTERLINE OF THE LATERAL PIPE AT 3.0 FEET BELOW GRADE WHEN THE LATERAL DEPTH IS GREATER THAN 4.0 FEET (PVC ONLY). WHEN THE TRACER WIRE IS ATTACHED TO THE LATERAL AND RISER ASSEMBLY, WITH BE FASTENED WITH TIE TRAPS OR APPROVED EQUAL.

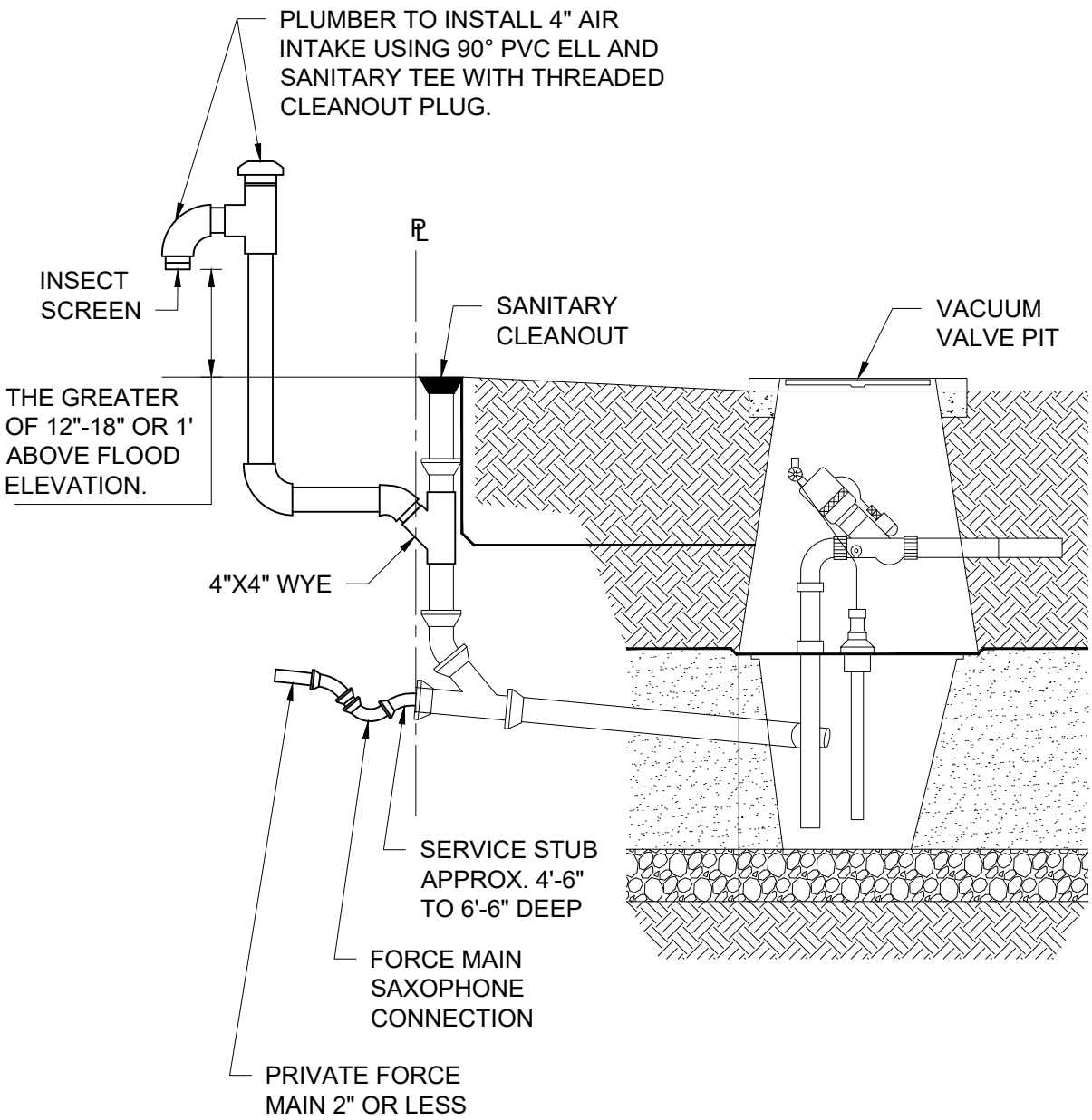

NOTES:

1. SEE PU 5.6 "VACUUM SYSTEM CONNECTION NOTES".
2. LOCATION OF AIR INTAKE SHALL BE PER APPROVED SITE PLAN.
3. FOR VALVE PITS WITH DEDICATED AIR INTAKE TERMINAL ELIMINATE THE AIR INTAKE ASSEMBLY.
4. WHERE A SINGLE FAMILY PRIVATE FORCE MAIN IS CONNECTED TO A PIT NO OTHER CONNECTIONS ARE PERMITTED.

Public Utilities	CITY OF VIRGINIA BEACH - PUBLIC UTILITIES STANDARD DETAILS	SCALE: NOT TO SCALE
	SINGLE FAMILY PRIVATE FORCE MAIN CONNECTION TO VACUUM VALVE PIT WITHOUT DEDICATED AIR INTAKE TERMINAL	DRAWING NO. PU 5.7
DATE: 10/2023		SHEET NO. 1 OF 1

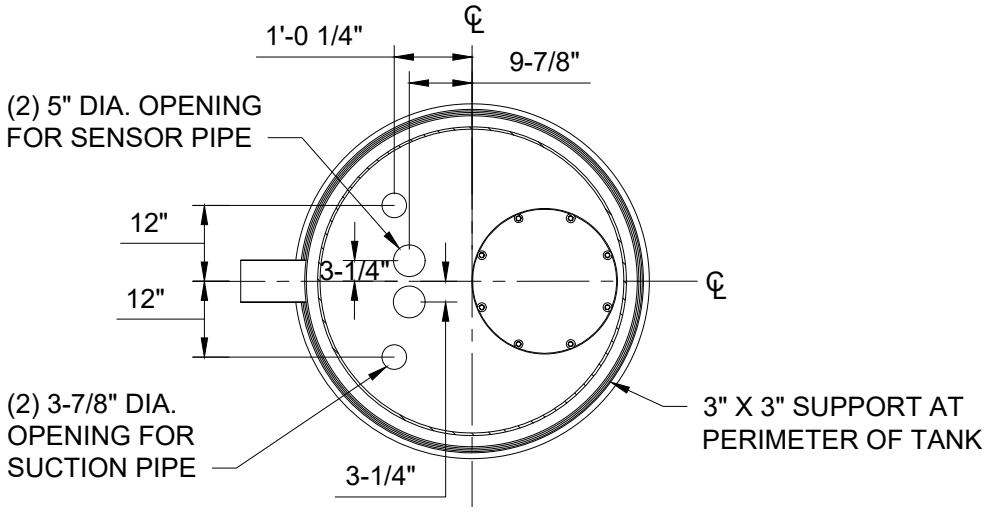

SECTION C-C
PLAN VIEW OF TANK EQUIPMENT ASSEMBLY

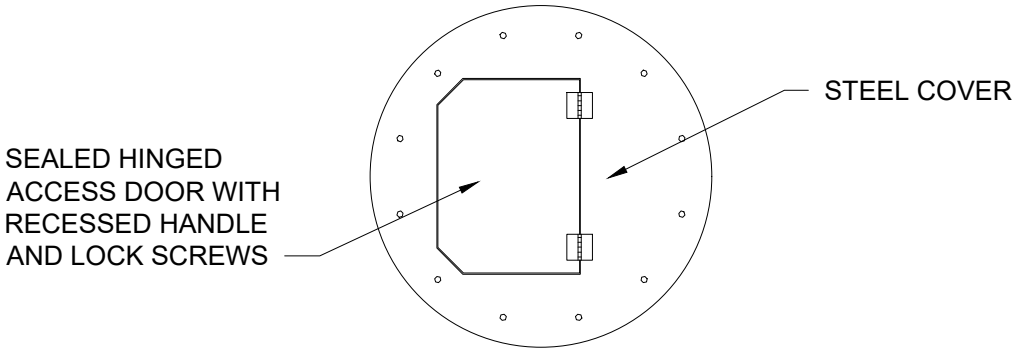

TOP VIEW

NOTE: NON-TRAFFIC INSTALLATION

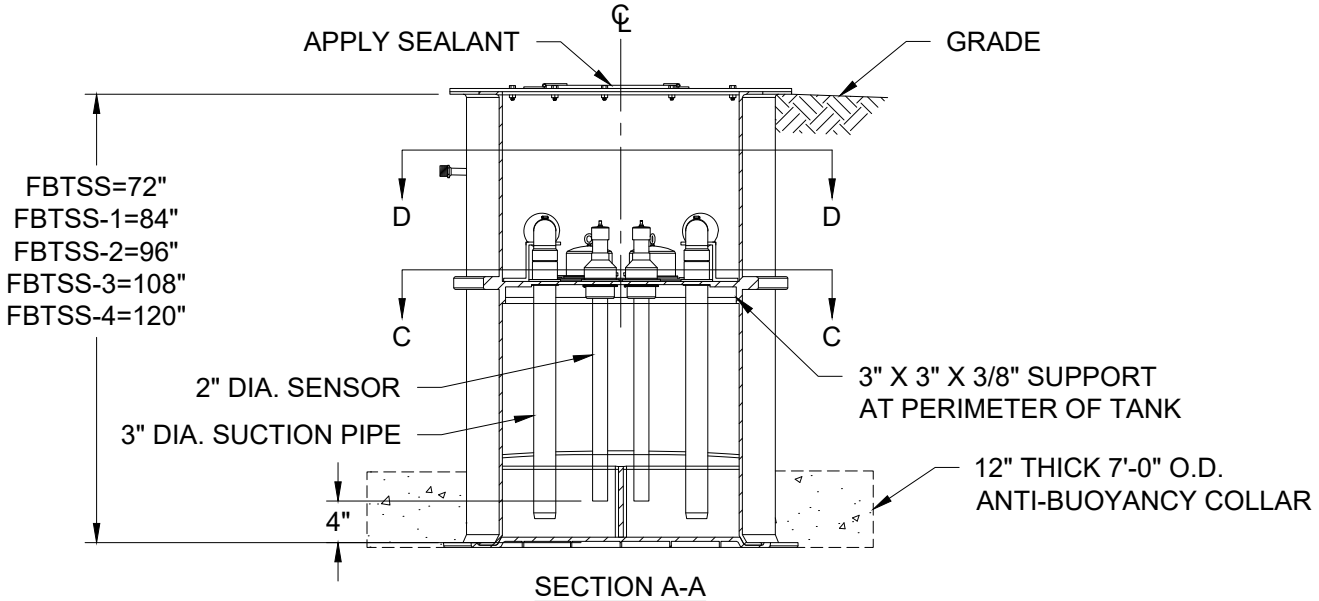

SECTION A-A

Public Utilities	CITY OF VIRGINIA BEACH - PUBLIC UTILITIES STANDARD DETAILS	SCALE: NOT TO SCALE
		DRAWING NO. PU 5.8
DATE: 10/2023	FIBERGLASS DUAL BUFFER TANK WITH EXTERNAL BREATHER	SHEET NO. 1 OF 2

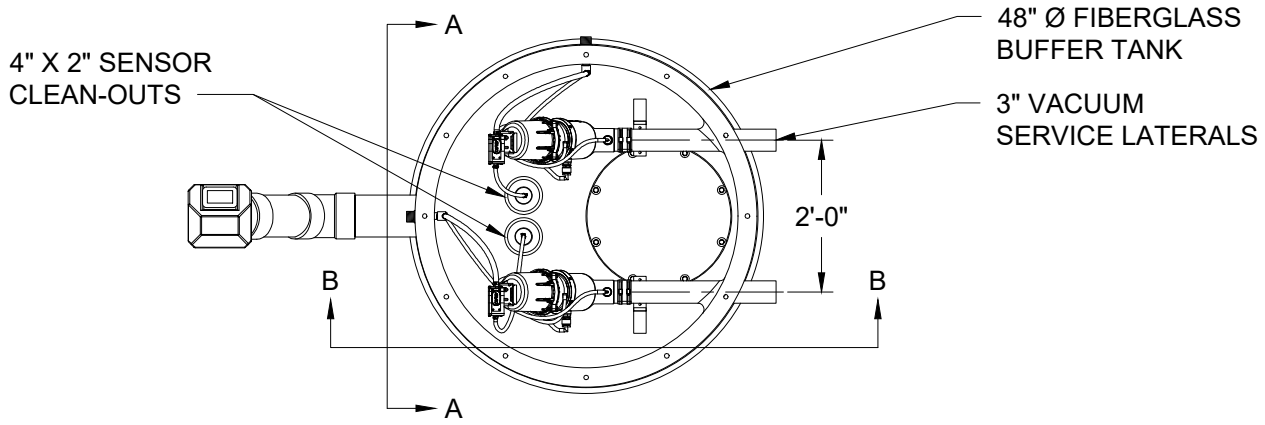

SECTION D-D
PLAN VIEW OF TANK EQUIPMENT ASSEMBLY

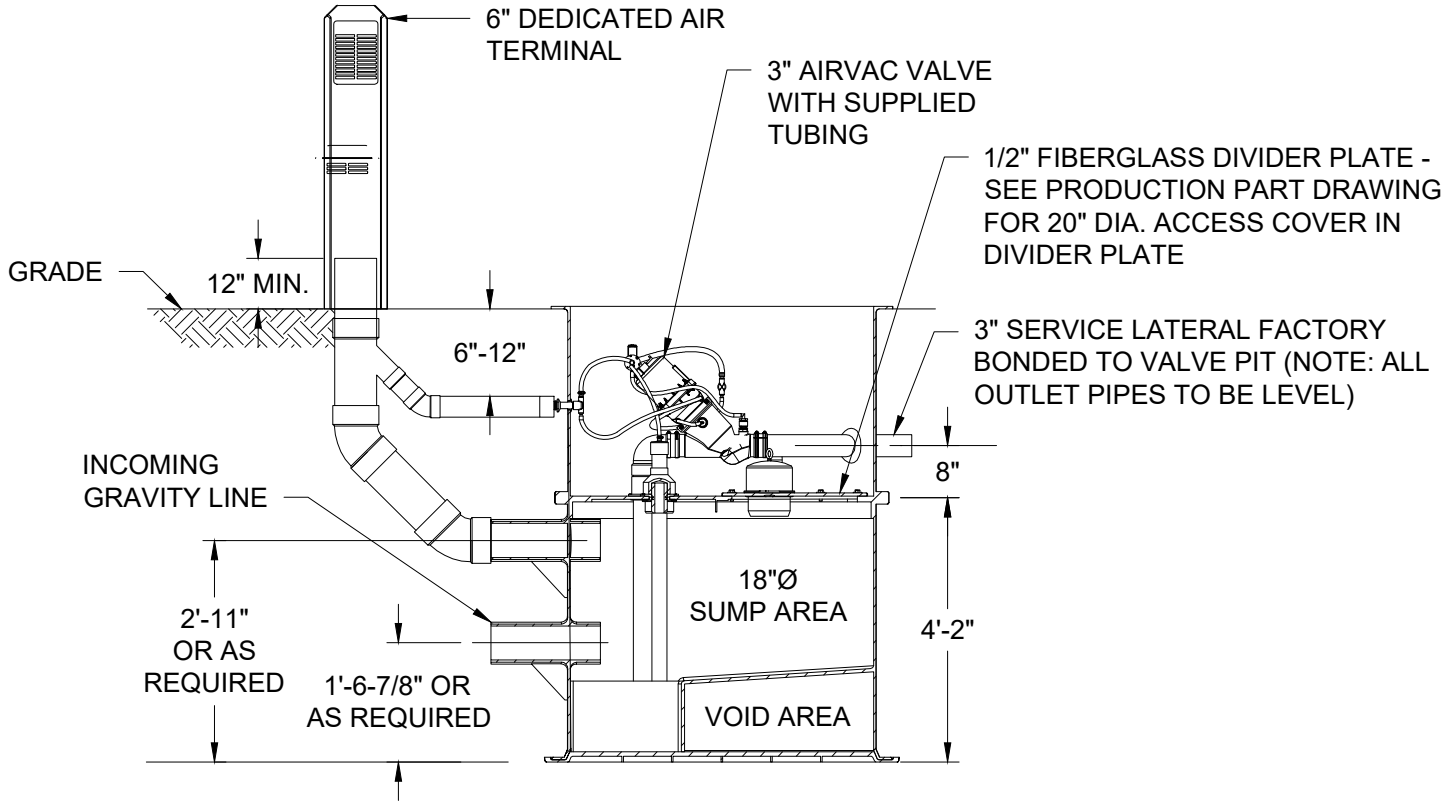

SECTION B-B

NOTES:

1. AIR INTAKE ON GRAVITY SEWER LATERALS NOT REQUIRED WITH DEDICATED AIR INTAKE.
2. CONNECT GRAVITY SEWER LATERALS AT DESIGNATED LOCATION.
3. THE HOLE CUT OUT SIZE FOR VARIOUS PIPE GROMMETS:
   - 6" GROMMET = 6 7/8" HOLE
   - 4" GROMMET = 5" HOLE
   - 3" GROMMET = 3 7/8" HOLE
   - 3/4" GROMMET = 1 1/4" HOLE
   - (ALL GROMMETS ARE SOIL PIPE TYPE)
4. SPECIFY GRAVITY SEWER LATERAL SIZES WHEN ORDERING PIT.

Public Utilities	CITY OF VIRGINIA BEACH - PUBLIC UTILITIES STANDARD DETAILS	SCALE: NOT TO SCALE
		DRAWING NO. PU 5.8
DATE: 10/2023	FIBERGLASS DUAL BUFFER TANK WITH EXTERNAL BREATHER	SHEET NO. 2 OF 2

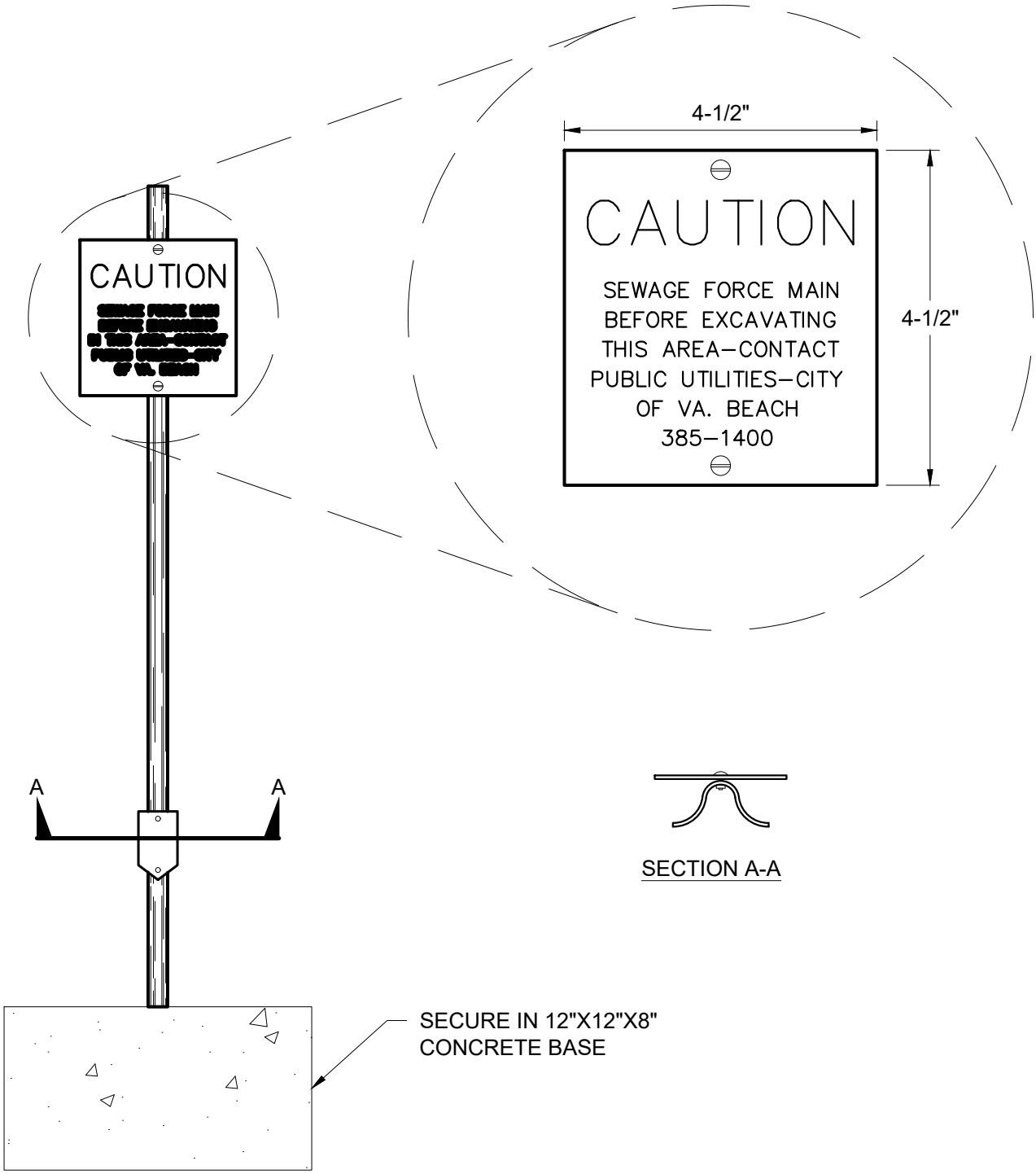

NOTES:

1. SIGN AND POST WILL BE FURNISHED BY THE CITY.
2. SIGN WILL READ "WATER MAIN" OR "SEWAGE FORCE MAIN" AS REQUIRED.

Public Utilities	CITY OF VIRGINIA BEACH - PUBLIC UTILITIES STANDARD DETAILS	SCALE: NOT TO SCALE
		DRAWING NO. PU 6.1
DATE: 10/2023	UTILITY WITNESS POST	SHEET NO. 1 OF 1

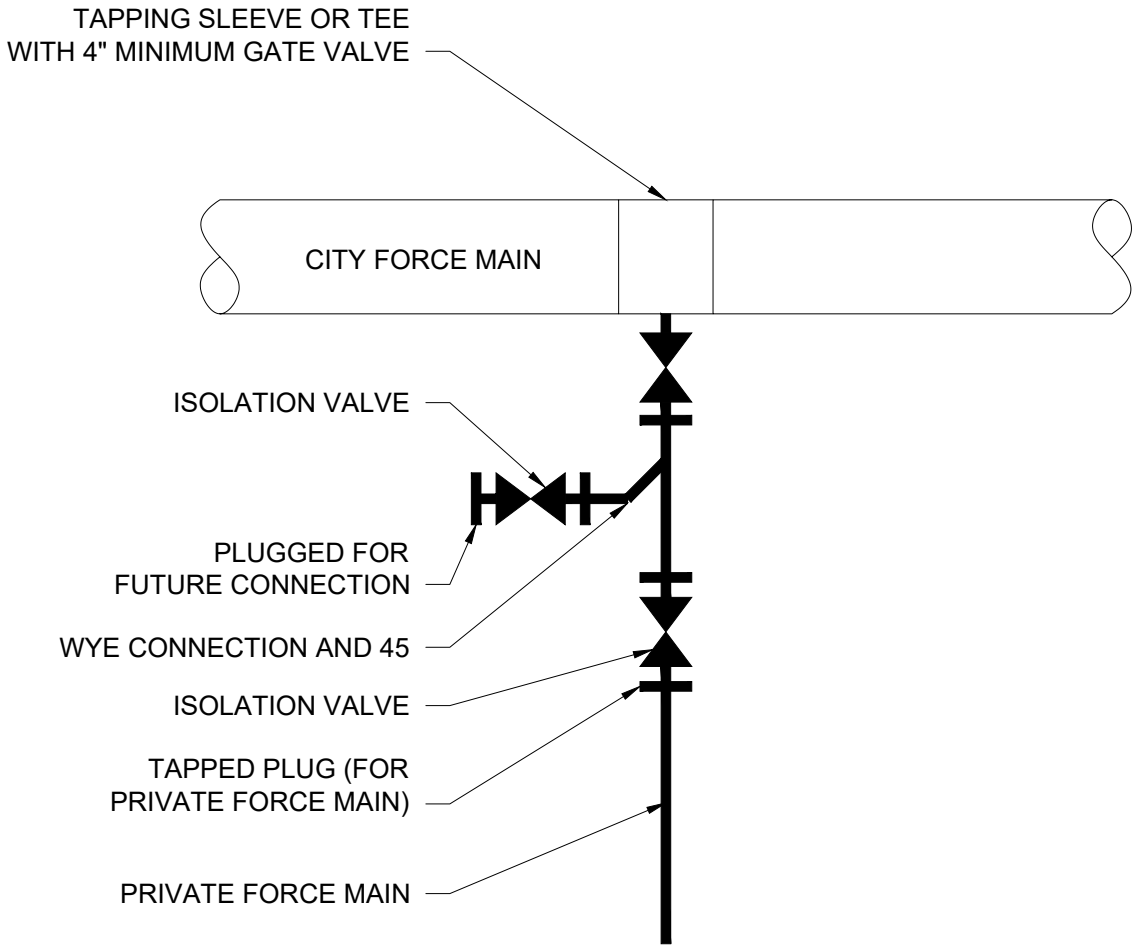

NOTE:

1. IF PRIVATE FORCE MAIN IS CONNECTED, PUBLIC UTILITIES MAINTENANCE WILL BE FROM THE ISOLATION VALVE TO THE EXISTING PUBLIC FORCE MAIN.

2. WYE AND SECONDARY ISOLATION VALVE ARE AT PUBLIC UTILITIES'S DISCRETION.

Public Utilities	CITY OF VIRGINIA BEACH - PUBLIC UTILITIES STANDARD DETAILS	SCALE: NOT TO SCALE
		DRAWING NO. PU 6.2
DATE: 10/2023	PRIVATE FORCE MAIN CONNECTION	SHEET NO. 1 OF 1

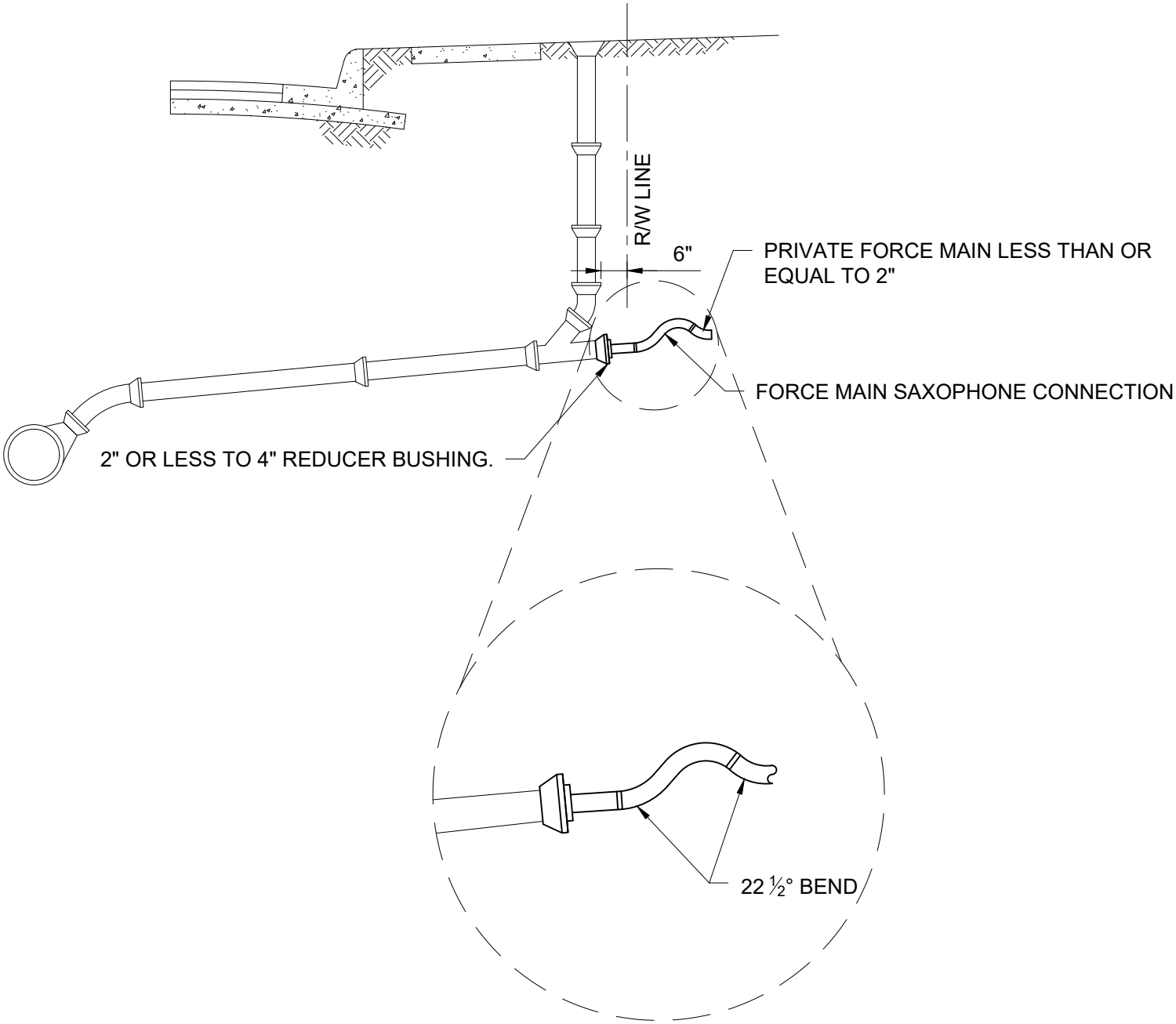

NOTE:

1. SEE PU 4.16 "SANITARY SEWER SERVICE CONNECTION".
2. FORCE MAIN CONNECTION TO BE MADE BY PLUMBING CONTRACTOR.

Public Utilities	CITY OF VIRGINIA BEACH - PUBLIC UTILITIES STANDARD DETAILS	SCALE: NOT TO SCALE
	SINGLE FAMILY PRIVATE FORCE MAIN CONNECTION TO SANITARY SEWER LATERAL	DRAWING NO. PU 6.3
DATE: 10/2023		SHEET NO. 1 OF 1

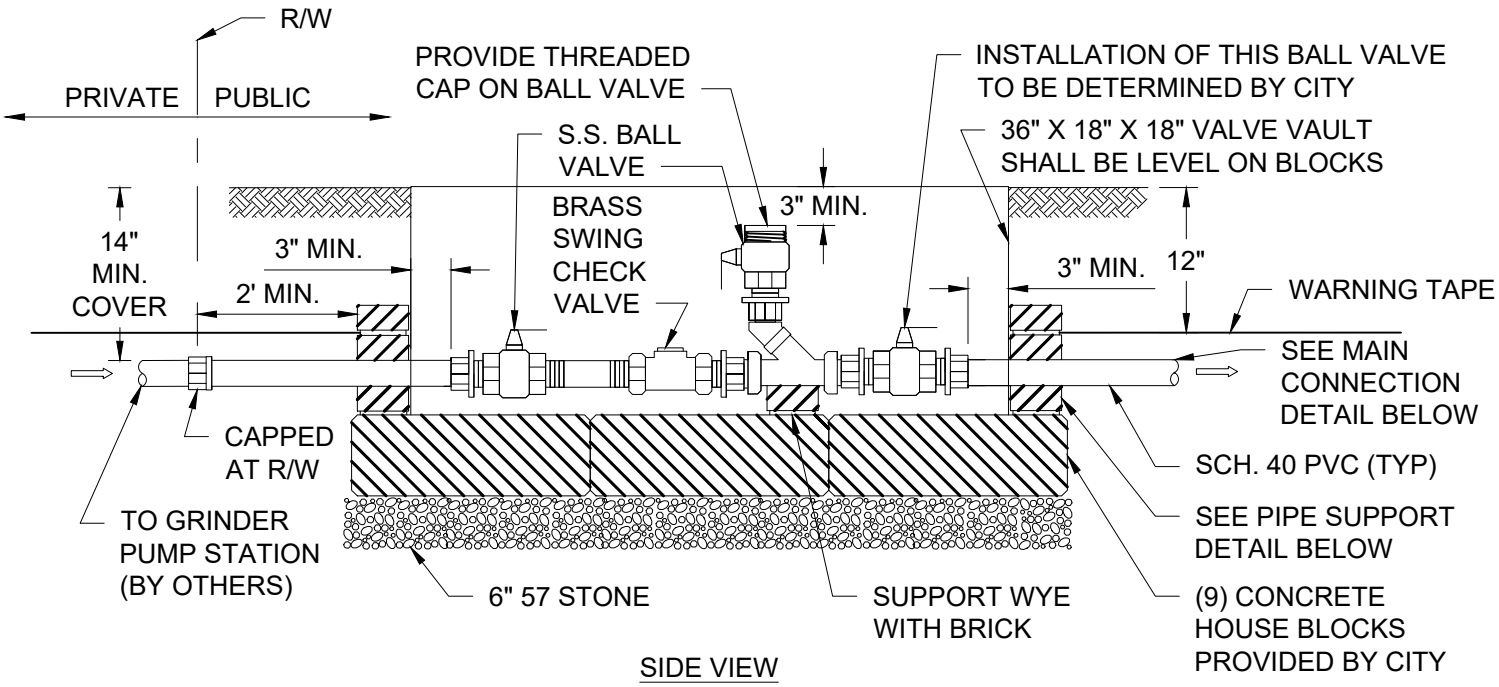

SIDE VIEW

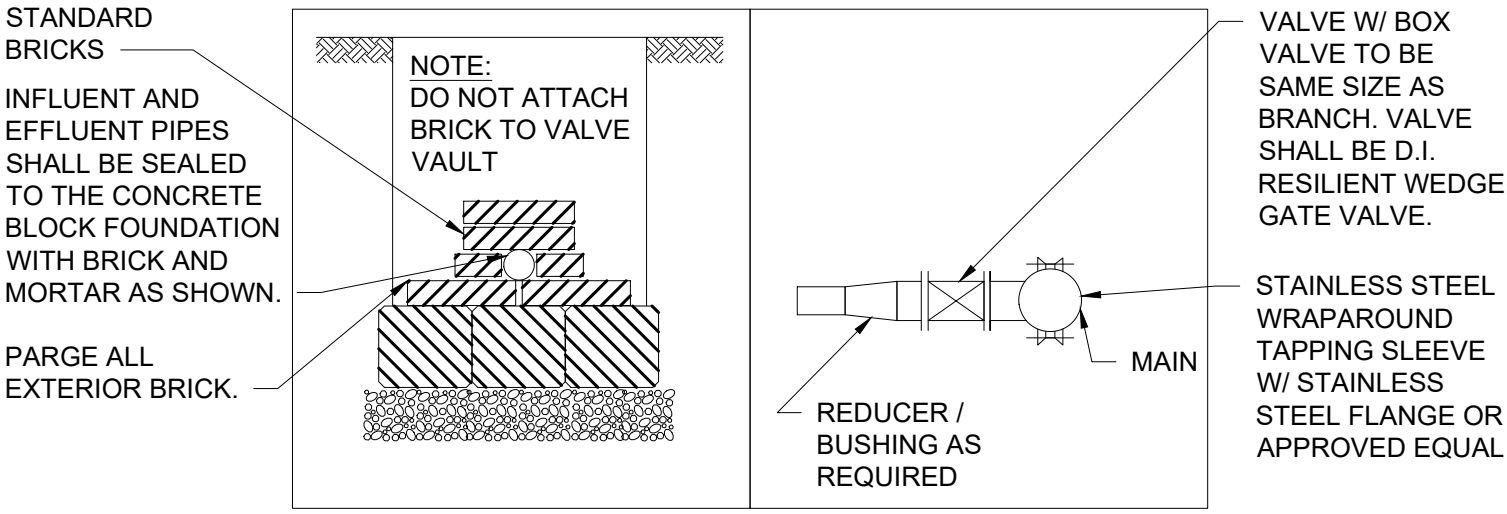

PIPE SUPPORT DETAIL

MAIN CONNECTION DETAIL

NOTES:

1. VALVE VAULT AND CONCRETE BLOCKS SHALL BE PROVIDED BY PUBLIC UTILITIES. THE CONTRACTOR SHALL PROVIDE PIPE, APPURTENANCES, BRICK, AND STONE.

2. WRAP SERVICE CONNECTION WITH 10 GAUGE INSULATED COPPER TRACER WIRE FROM THE TAP ALONG THE PIPE CROWN AND INTO THE VALVE BOX.

3. TRACER WIRE SHALL BE AWG 10 SOLID COPPER WIRE WITH POLYETHYLENE INSULATION. THE TRACER WIRE SHALL BE ATTACHED TO THE LATERAL PIPE WHEN THE DEPTH IS NO GREATER THAN 4.0 FEET (PVC ONLY). THE WIRE SHALL BE BURIED OVER THE CENTERLINE OF THE LATERAL PIPE AT 3.0 FEET BELOW GRADE WHEN THE LATERAL DEPTH IS GREATER THAN 4.0 FEET (PVC ONLY). WHEN THE TRACER WIRE IS ATTACHED TO THE LATERAL AND RISER ASSEMBLY, WITH BE FASTENED WITH TIE TRAPS OR APPROVED EQUAL.

VB Public Utilities	CITY OF VIRGINIA BEACH - PUBLIC UTILITIES STANDARD DETAILS	SCALE: NOT TO SCALE
		DRAWING NO. PU 6.4
DATE: 10/2023	LOW PRESSURE FORCE MAIN CONNECTION	SHEET NO. 1 OF 1

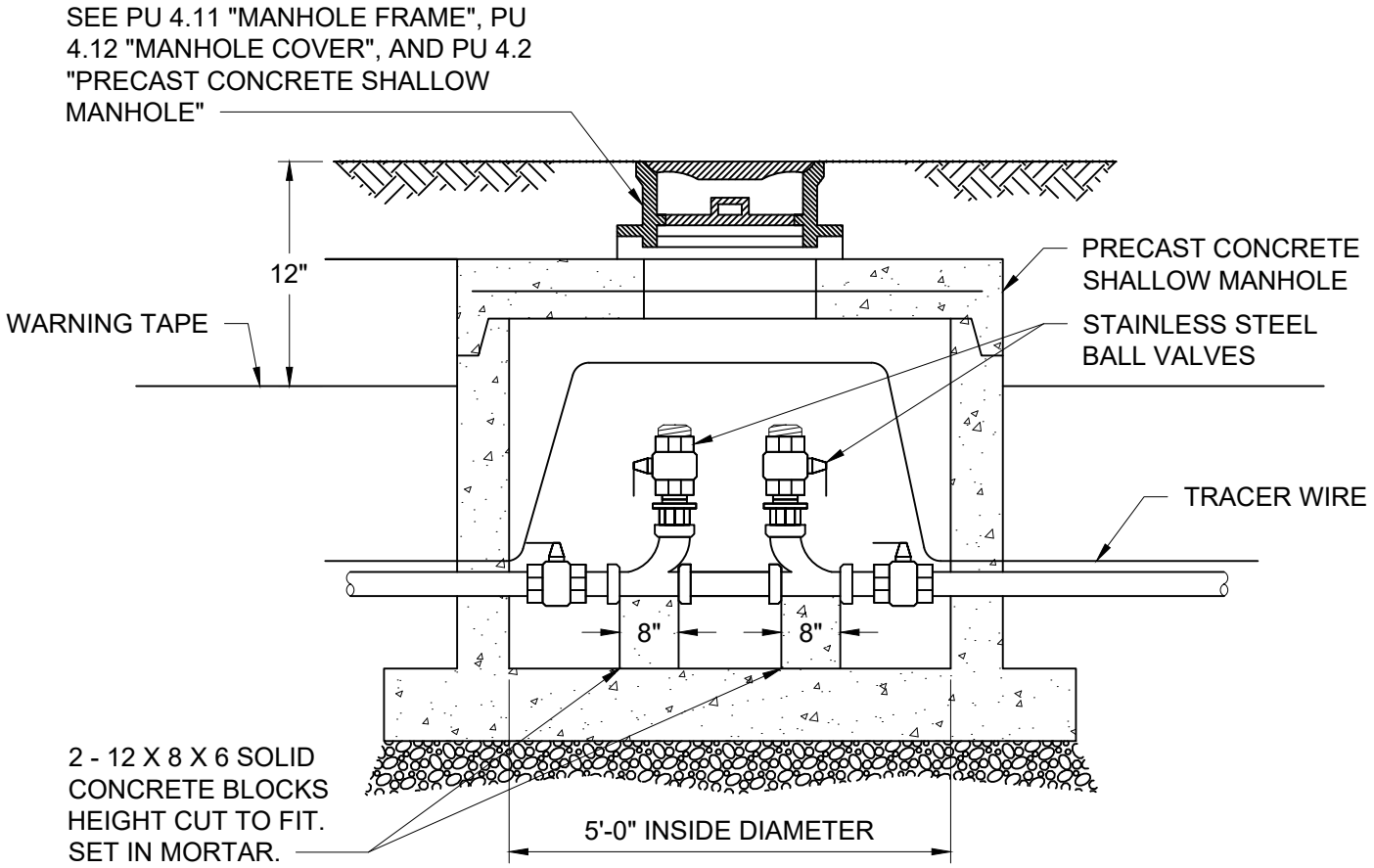

NOTE:

1. IN-LINE FLUSHING CHAMBER TO BE INSTALLED AT A MAX. DISTANCE OF 500 FEET APART.

2. TRACER WIRE SHALL BE AWG 10 SOLID COPPER WIRE WITH POLYETHYLENE INSULATION. THE TRACER WIRE SHALL BE ATTACHED TO THE LATERAL PIPE WHEN THE DEPTH IS NO GREATER THAN 4.0 FEET (PVC ONLY). THE WIRE SHALL BE BURIED OVER THE CENTERLINE OF THE LATERAL PIPE AT 3.0 FEET BELOW GRADE WHEN THE LATERAL DEPTH IS GREATER THAN 4.0 FEET (PVC ONLY). WHEN THE TRACER WIRE IS ATTACHED TO THE LATERAL AND RISER ASSEMBLY, WITH BE FASTENED WITH TIE TRAPS OR APPROVED EQUAL.

VB Public Utilities	CITY OF VIRGINIA BEACH - PUBLIC UTILITIES STANDARD DETAILS	SCALE: NOT TO SCALE
		DRAWING NO. PU 6.5
DATE: 10/2023	LOW PRESSURE FORCE MAIN IN-LINE FLUSHING CHAMBER	SHEET NO. 1 OF 1

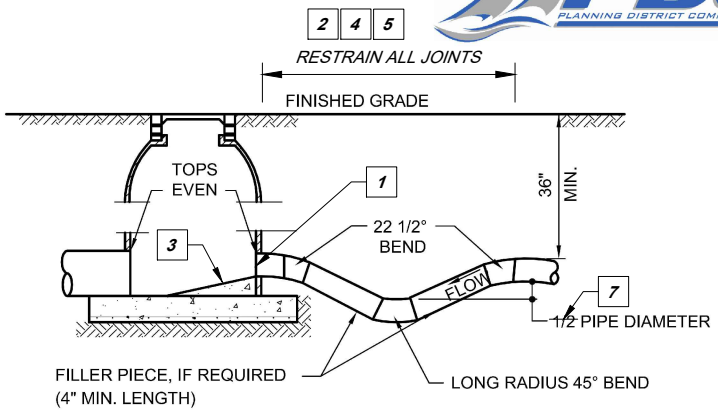

FOR DISCHARGE INTO SHALLOW MANHOLE

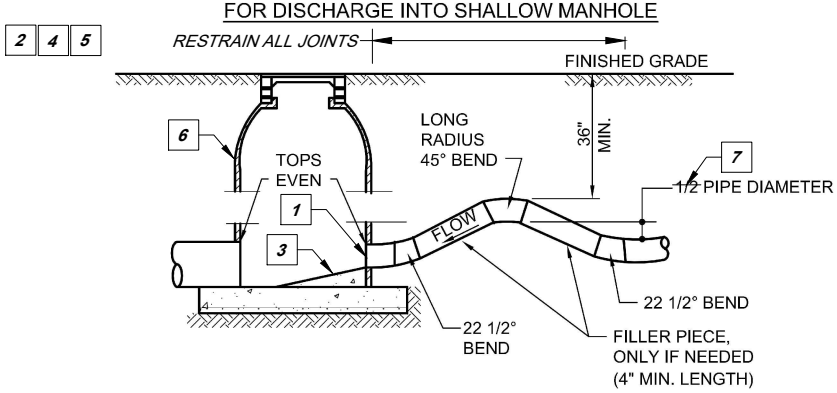

FOR DISCHARGE INTO STANDARD MANHOLE

NOTES:

1. ~~ALL JOINTS MUST BE PROTECTED BY RETAINER GLANDS OR THREADED RODS (GALV.).~~ 4
2. ~~ALL RESTRAINTS SHALL BE IN ACCORDANCE TO LOCALITY REQUIREMENTS.~~ 5
3. ~~COAT MANHOLE PER LOCALITY REQUIREMENTS.~~ 6

FORCE MAIN SAXOPHONE

NOT TO SCALE

REFERENCE	CATEGORY	DATE	SHEET No.	DETAIL No.
200,803	SANITARY SYSTEMS	6/16	1 OF 1	SS_17

VIRGINIA BEACH MODIFICATIONS TO REGIONAL STANDARDS SIXTH EDITION

1. FLEXIBLE BOOT CONNECTION PER SPECIFICATION SECTION 200.
2. RESTRAIN ALL JOINTS WITHIN THE SAXOPHONE.
3. SEE PU 4.6 "SANITARY SEWER MANHOLE INVERT SHAPING".
4. ALL JOINTS ON FERROUS PIPE MUST BE RESTRAINED BY RETAINER GLANDS. ALL RESTRAINED JOINTS ON PLASTIC PIPE SHALL BE BUTT FUSED OR SOLVENT WELDED.
5. ALL RESTRAINTS SHALL BE IN ACCORDANCE WITH PUBLIC UTILITIES REQUIREMENTS.
6. PROVIDE TYPE B EPOXY COATING ON INTERIOR OF MANHOLE.
7. FULL

Public Utilities

DATE: 10/2023

CITY OF VIRGINIA BEACH - PUBLIC UTILITIES
STANDARD DETAILS

FORCE MAIN SAXOPHONE

SCALE: NOT TO SCALE

DRAWING NO. PU 6.6

SHEET NO. 1 OF 1

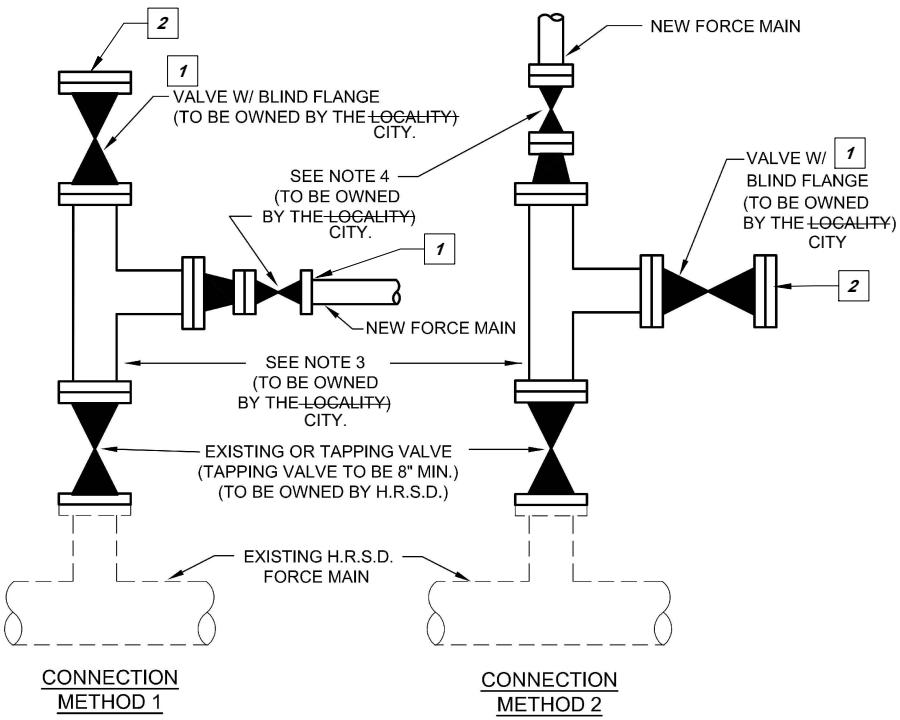

NOTES:

1. DIRECTION OF TEE BRANCH TO BE DETERMINED BY THE ~~LOCALITY.~~ CITY.
2. TEE AND VALVE TO BE FLANGED.
3. TEE TO BE SAME SIZE AS EXISTING VALVE OR TAPPING VALVE.
4. MINIMUM SIZE VALVE TO BE USED IS 4" WITH NON-RISING STEM AND 2" SQUARE OPERATING NUT.

FORCE MAIN CONNECTION TO H.R.S.D. FORCE MAIN

NOT TO SCALE

REFERENCE	CATEGORY	DATE	SHEET No.	DETAIL No.
200,803	SANITARY SYSTEMS	6/16	1 OF 1	SS_18

VIRGINIA BEACH MODIFICATIONS TO REGIONAL STANDARDS SIXTH EDITION

1 ALL CITY VALVES SHALL BE GATE VALVES THAT OPEN LEFT WITH A BLACK OPERATING NUT.

2 VALVE WITH BLIND FLANGE - SIZE WILL BE DETERMINED BY PUBLIC UTILITIES .

Public Utilities

DATE: 10/2023

CITY OF VIRGINIA BEACH - PUBLIC UTILITIES
STANDARD DETAILS

FORCE MAIN CONNECTION TO H.R.S.D. FORCE MAIN

SCALE: NOT TO SCALE

DRAWING NO. PU 6.7

SHEET NO. 1 OF 1

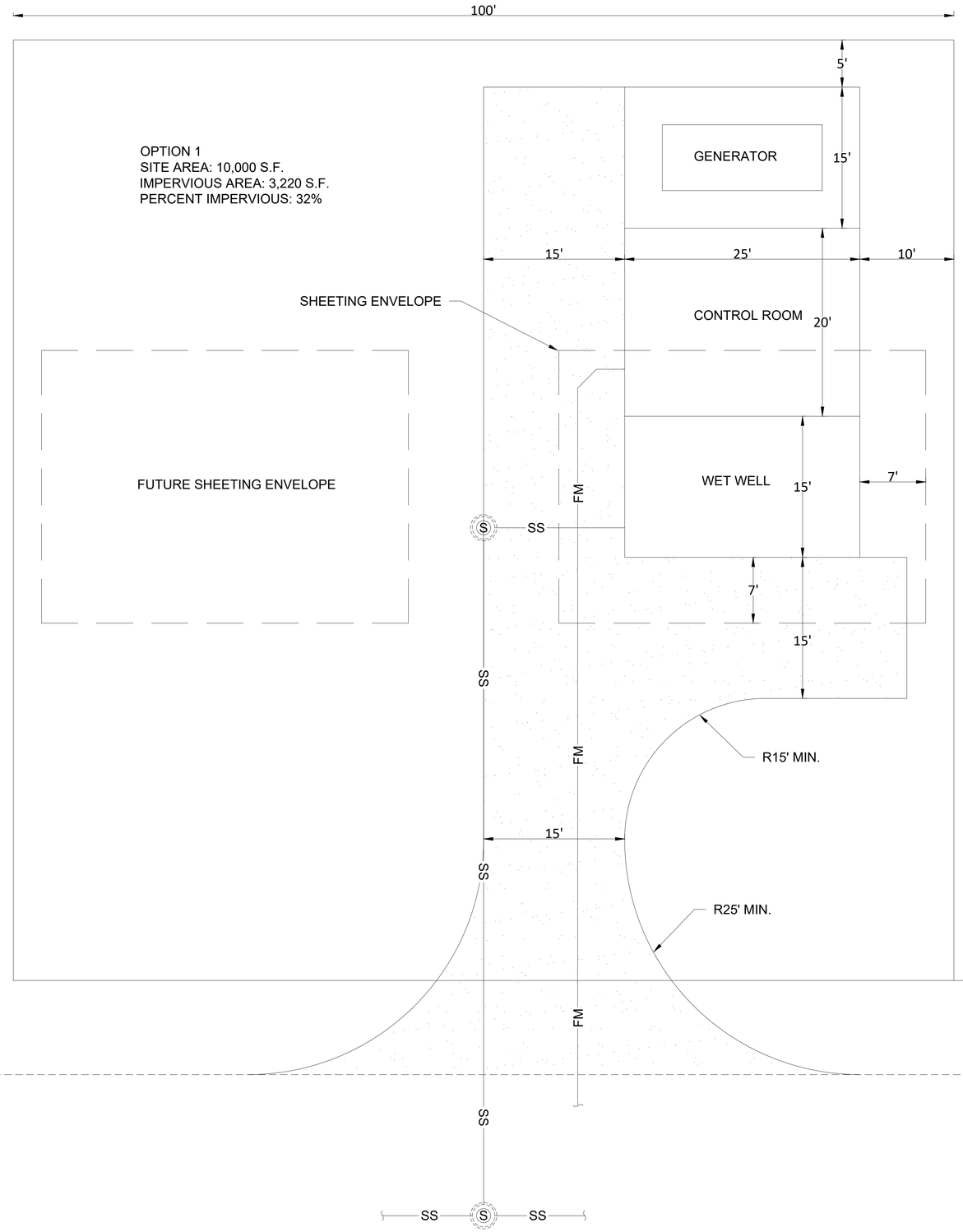

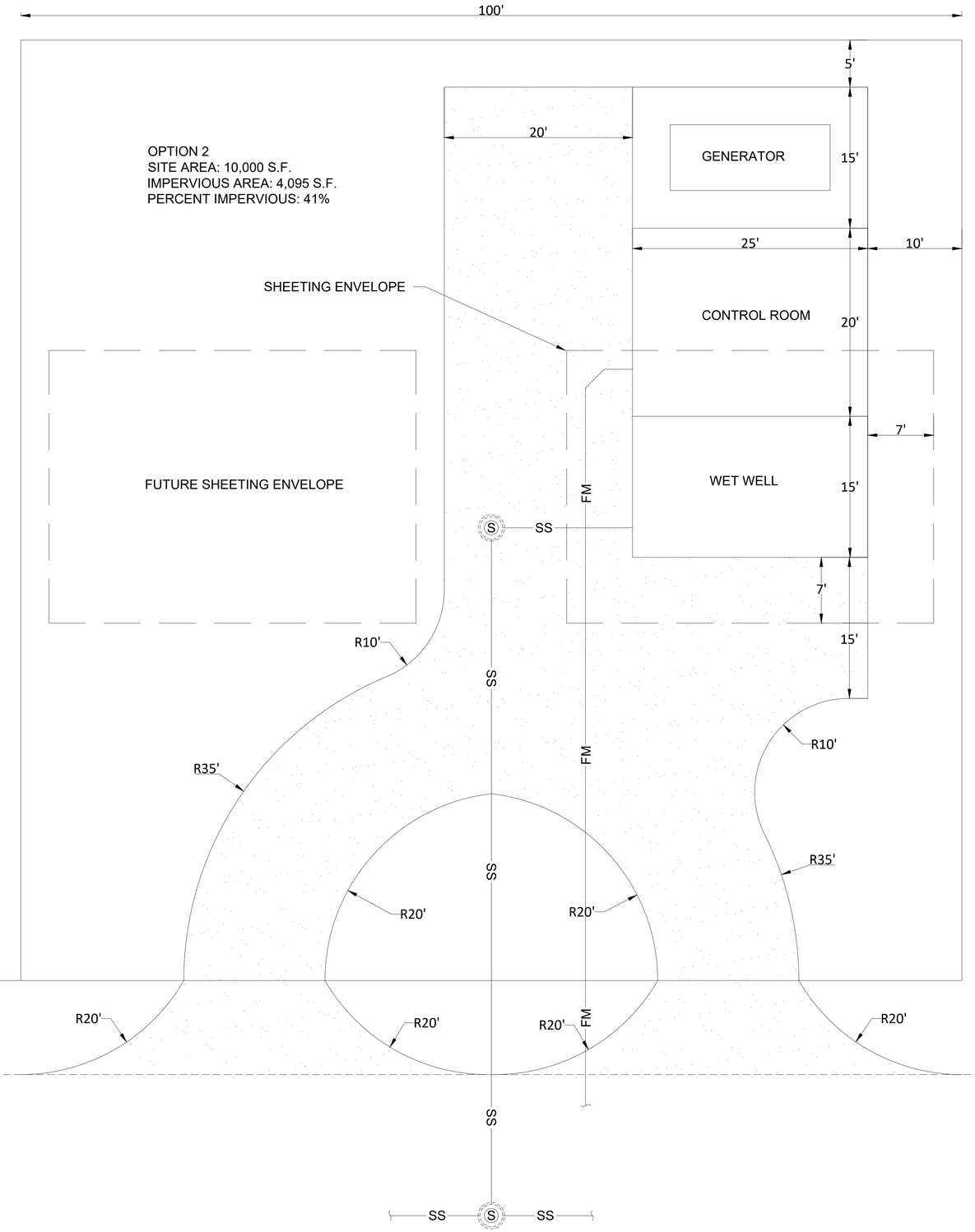

VB Public Utilities	CITY OF VIRGINIA BEACH - PUBLIC UTILITIES STANDARD DETAILS	SCALE: NOT TO SCALE
DATE: 10/2023	STANDARD PUMP STATION SITE PLAN SCHEMATIC	DRAWING NO. PU 7.1
		SHEET NO. 1 OF 1

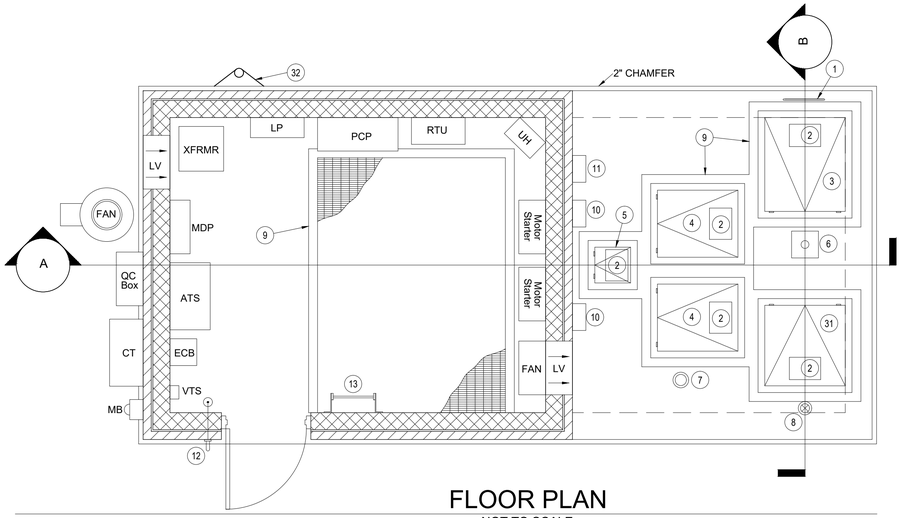

FLOOR PLAN

NOT TO SCALE

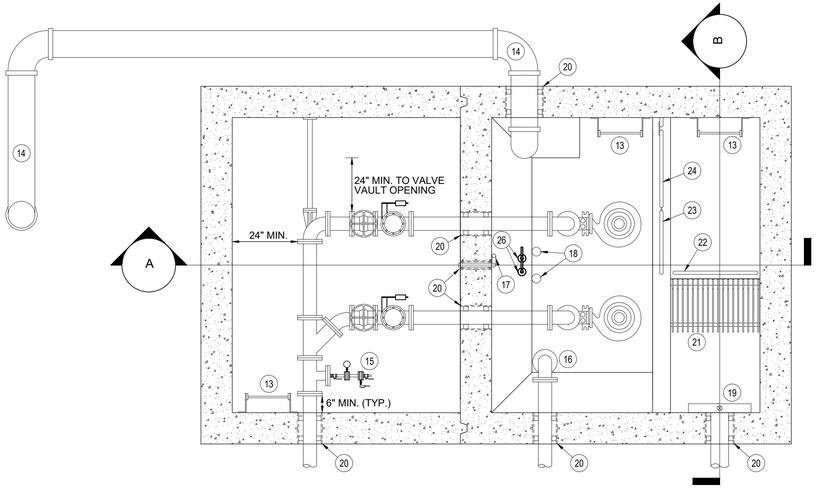

BELOW GRADE PLAN

NOT TO SCALE

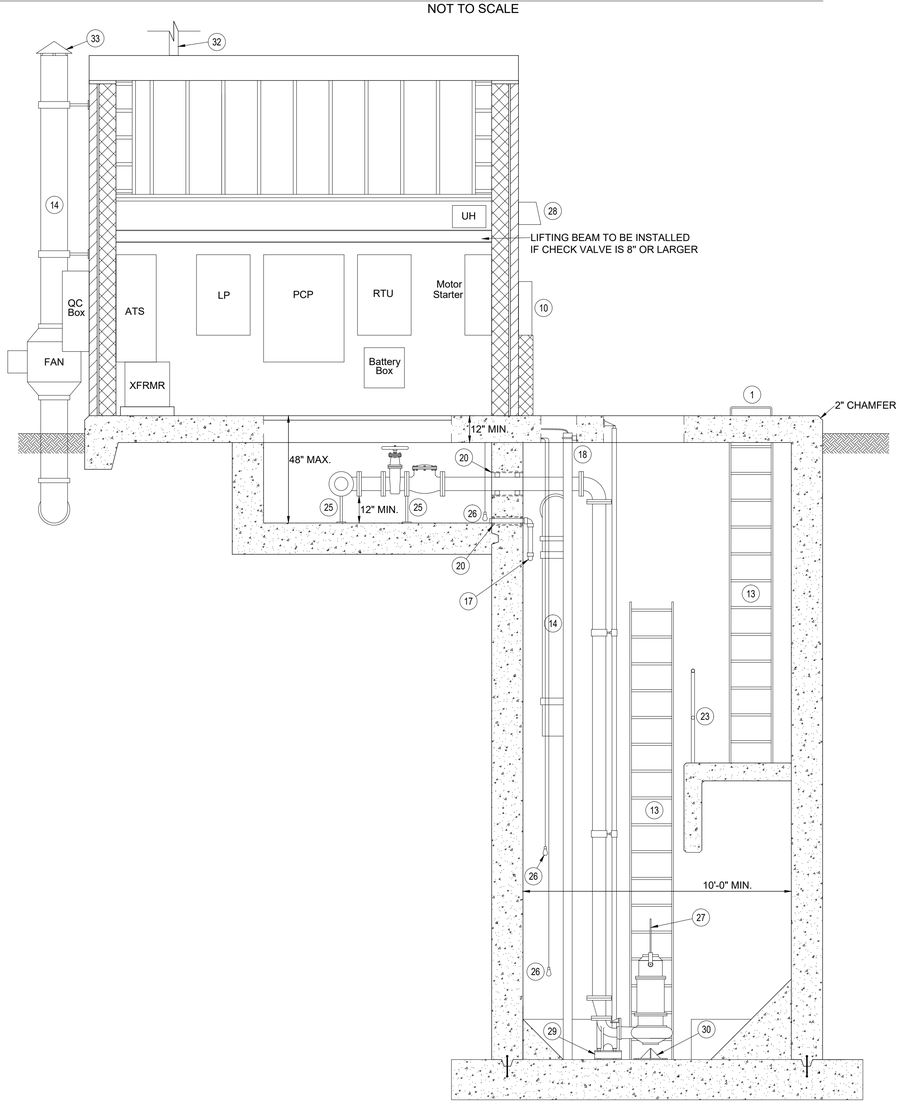

SECTION A

NOT TO SCALE

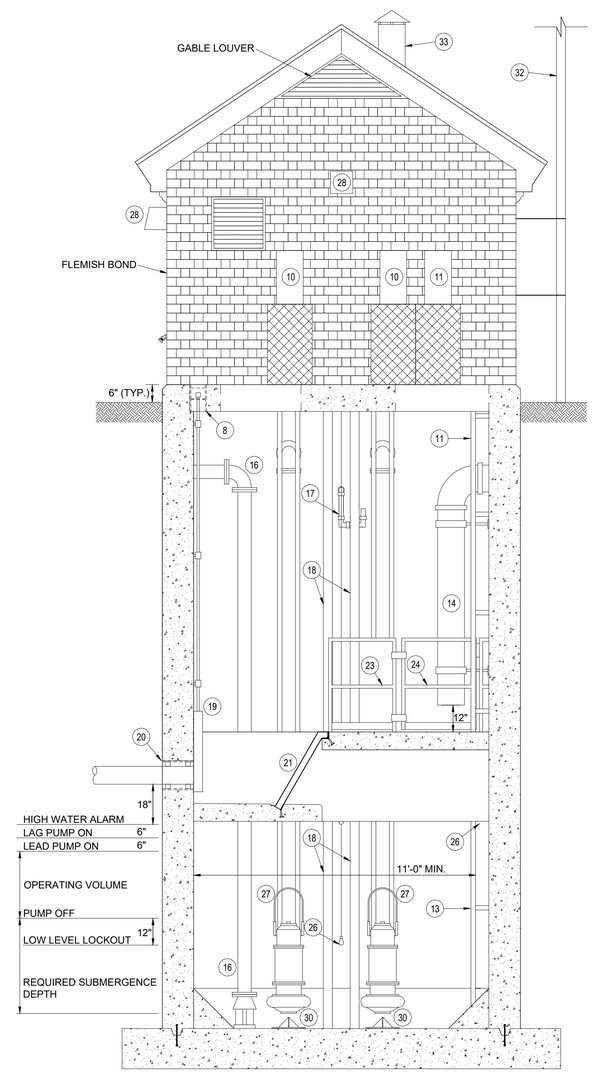

SECTION B

NOT TO SCALE

NOTES:

1. THE INFORMATION PROVIDED PRESENTS A GENERIC TEMPLATE OF THE SEWAGE PUMPING STATION TYPE THAT IS PREFERRED BY THE CITY OF VIRGINIA BEACH DEPARTMENT OF PUBLIC UTILITIES. THE DEVELOPMENT OF A COMPLETE DESIGN AND DOCUMENTS FOR CONSTRUCTION OF A FACILITY, BASED UPON THIS TEMPLATE, SHALL BE TOTALLY THE RESPONSIBILITY OF THE PROFESSIONAL ENGINEER. THIS TEMPLATE IS NOT SUITABLE FOR ANY SPECIFIC CONSTRUCTION PURPOSE, SITE OR APPLICATION.
2. STRUCTURE AND COMPONENT SIZES WILL VARY IN ACCORDANCE WITH THE DESIGN PARAMETERS THAT ARE SPECIFIC TO EACH FACILITY.
3. REFER TO THE CITY OF VIRGINIA BEACH DEPARTMENT OF PUBLIC UTILITIES STANDARD PUMP STATION SPECIFICATIONS AND DETAILS FOR DETAILED COMPONENT DESCRIPTIONS.
4. REFER TO THE CITY OF VIRGINIA BEACH DEPARTMENT OF PUBLIC UTILITIES APPROVED PRODUCTS LIST FOR ACCEPTABLE MANUFACTURERS.
5. ALL PIPE FLANGES SHALL BE LOCATED 6" MIN. FROM WALLS.
6. PROVIDE SEPARATE CONDUITS FOR THE LEVEL TRANSDUCERS AND FLOATS.
7. LADDERS AND ACCESS OPENINGS SHALL COMPLY WITH OSHA STANDARD 1910.27.

COMPONENTS:

1. GRAB BAR
2. CONFINED SPACE ENTRY SIGN
3. ENTRY HATCH (36" x 42") WITH FALL PROTECTION GRATING
4. PUMP REMOVAL HATCH (SIZED AS REQUIRED)
5. STILLING WELL AND FLOAT HATCH (16" x16")
6. DAVIT ARM BASE
7. VALVE BOX FOR TEMPORARY BYPASS FLOATS
8. FLOOR BOX
9. 4" WIDE PAINT STRIP (SAFETY YELLOW)
10. JUNCTION BOX FOR PUMP CABLING
11. JUNCTION BOX FOR LEVEL SENSING CABLING
12. WATER SERVICE
13. LADDER
14. CPVC VENTILATION DUCT
15. PRESSURE SENSOR ASSEMBLY
16. EMERGENCY PUMP CONNECTION SUCTION PIPING
17. VALVE VAULT DRAIN
18. STILLING WELL FOR LEVEL TRANSDUCER
19. SELF CONTAINED SLUICE GATE WITH S.S. NON-RISING STEM
20. WALL SLEEVE WITH LINK SEALS
21. ALUMINUM BAR SCREEN
22. REMOVABLE GUARD RAIL
23. FIXED GUARD RAIL
24. SELF CLOSING GATE
25. ADJUSTABLE PIPE SUPPORT
26. ALARM FLOAT
27. STAINLESS STEEL LIFTING BAIL
28. WALL PACK LIGHT
29. STAINLESS STEEL SUPPORT
30. STAINLESS STEEL ANTI-VORTEX CONE
31. 36" x 36" HATCH
32. SCADA ANTENNA
33. RAIN CAP WITH INSECT SCREEN

ABBREVIATIONS:

ATS	AUTOMATIC TRANSFER SWITCH
CT	CURRENT TRANSFORMER CABINET
ECB	ENCLOSED CIRCUIT BREAKER
LP	LIGHTING/LOW VOLTAGE PANEL
LV	LOUVER
MB	METER BASE
MDP	MAIN DISTRIBUTION PANEL
PCP	PUMP CONTROL PANEL
QC BOX	QUICK CONNECT BOX
RTU	REMOTE TELEMETRY UNIT
VTS	VOLTAGE TEST STATION
XFRMR	TRANSFORMER
UH	UNIT HEATER

TEMPLATE DRAWING - NOT FOR CONSTRUCTION

VB Public Utilities	CITY OF VIRGINIA BEACH - PUBLIC UTILITIES STANDARD DETAILS	SCALE: NOT TO SCALE
		DRAWING NO. PU 7.2
DATE: 10/2023	SCHEMATIC SUBMERSIBLE PUMP STATION	SHEET NO. 1 OF 1

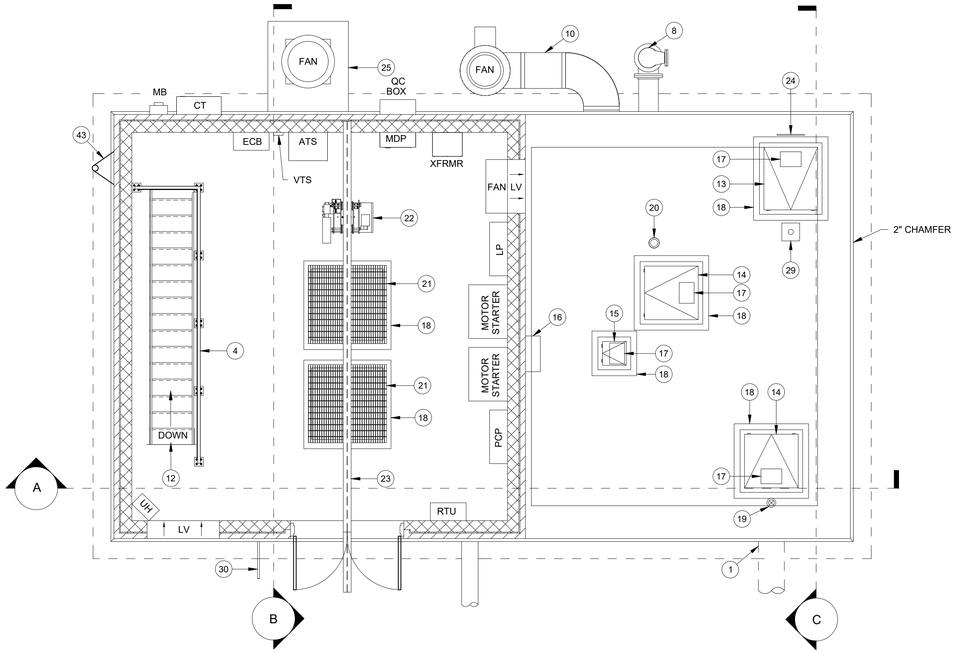

FLOOR PLAN

NOT TO SCALE

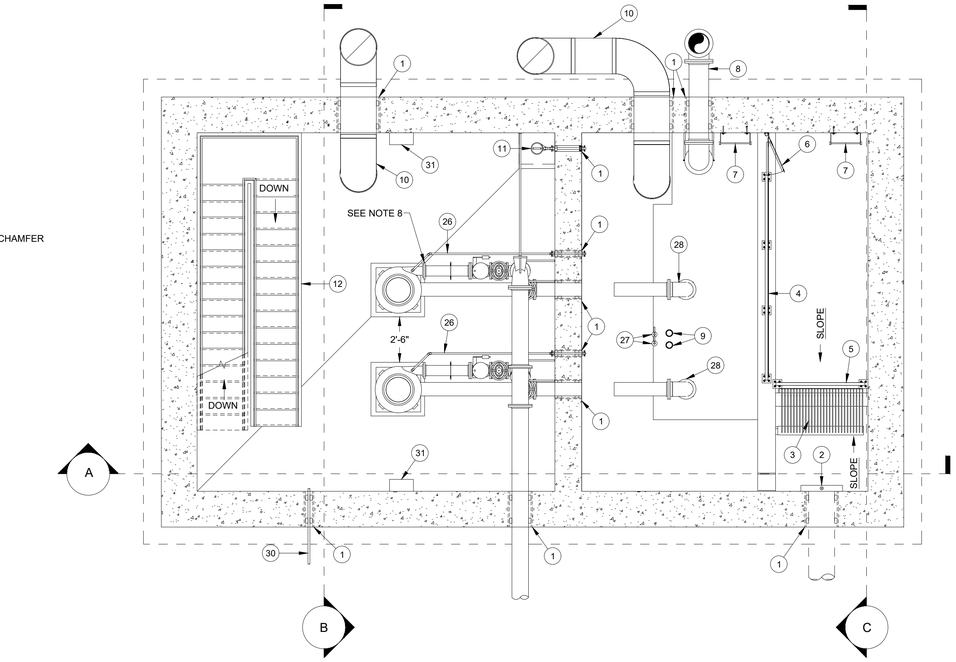

BELOW GRADE PLAN

NOT TO SCALE

NOTES:

1. THE INFORMATION PROVIDED PRESENTS A GENERIC TEMPLATE OF THE SEWAGE PUMPING STATION TYPE THAT IS PREFERRED BY THE CITY OF VIRGINIA BEACH DEPARTMENT OF PUBLIC UTILITIES. THE DEVELOPMENT OF A COMPLETE DESIGN AND DOCUMENTS FOR CONSTRUCTION OF A FACILITY, BASED UPON THIS TEMPLATE, SHALL BE TOTALLY THE RESPONSIBILITY OF THE PROFESSIONAL ENGINEER. THIS TEMPLATE IS NOT SUITABLE FOR ANY SPECIFIC CONSTRUCTION PURPOSE, SITE OR APPLICATION.
2. STRUCTURE AND COMPONENT SIZES WILL VARY IN ACCORDANCE WITH THE DESIGN PARAMETERS THAT ARE SPECIFIC TO EACH FACILITY.
3. REFER TO THE CITY OF VIRGINIA BEACH DEPARTMENT OF PUBLIC UTILITIES STANDARD PUMP STATION SPECIFICATIONS AND DETAILS FOR DETAILED COMPONENT DESCRIPTIONS.
4. REFER TO THE CITY OF VIRGINIA BEACH DEPARTMENT OF PUBLIC UTILITIES APPROVED PRODUCTS LIST FOR ACCEPTABLE MANUFACTURERS.
5. ALL PIPE FLANGES SHALL BE LOCATED 6" MIN. FROM WALLS.
6. PROVIDE SEPARATE CONDUITS FOR THE LEVEL TRANSDUCERS AND FLOATS.
7. LADDERS AND ACCESS OPENINGS SHALL COMPLY WITH OSHA STANDARD 1910.27.
8. REDUCER REQUIRED ON DISCHARGE FLANGE WITH 5" PUMP.
9. PIPE DIAMETER CHANGES SHOULD BE MADE WITH REDUCING BASE ELBOW WHERE FEASIBLE.

ABBREVIATIONS:

ATS	AUTOMATIC TRANSFER SWITCH
CT	CURRENT TRANSFORMER CABINET
ECB	ENCLOSED CIRCUIT BREAKER
LP	LIGHTING/LOW VOLTAGE PANEL
MB	METER BASE
MDP	MAIN DISTRIBUTION PANEL
PCP	PUMP CONTROL PANEL
QC BOX	QUICK CONNECT BOX
RTU	REMOTE TELEMETRY UNIT
VTS	VOLTAGE TEST STATION
XFRMR	TRANSFORMER
UH	UNIT HEATER

COMPONENTS:

1. WALL SLEEVE WITH LINK SEALS
2. SELF CONTAINED SLUICE GATE WITH S.S. NON-RISING STEM
3. ALUMINUM BAR SCREEN
4. FIXED GUARD RAIL
5. REMOVABLE GUARD RAIL
6. SELF CLOSING GATE
7. LADDER
8. EMERGENCY PUMP CONNECTION SUCTION PIPING
9. STILLING WELL FOR LEVEL TRANSDUCER
10. CPVC VENTILATION DUCT
11. SUMP PUMP
12. ALUMINUM STAIRS
13. ENTRY HATCH (36"X42") WITH FALL PROTECTION GRATING
14. 36"X36" HATCH
15. STILLING WELL AND FLOAT HATCH (16"X16")
16. JUNCTION BOX FOR LEVEL SENSING CABLING
17. CONFINED SPACE ENTRY SIGN
18. 4" WIDE PAINT STRIP (SAFETY YELLOW)
19. FLOOR BOX
20. VALVE BOX FOR TEMPORARY BYPASS FLOATS
21. ALUMINUM ACCESS GRATE (SIZED AS REQUIRED)
22. HOIST (ONLY REQUIRED FOR 75HP PUMPS AND ABOVE)
23. TELESCOPING HOIST BEAM
24. GRAB BAR
25. CONC. PAD
26. VOLUTE VENT PIPING
27. ALARM FLOAT
28. FLARED SUCTION ELBOW
29. DAVIT ARM BASE
30. WATER SERVICE
31. JUNCTION BOX FOR PUMP CABLING
32. SUMP PUMP DISCHARGE PIPING
33. STAINLESS STEEL ANTI-VORTEX CONE
34. ADJUSTABLE PIPE SUPPORT
35. PRESSURE SENSOR ASSEMBLY
36. PIPE HANGER SUPPORTS
37. RAIN CAP WITH INSECT SCREEN
38. VOLUTE VENT PIPING
39. ALARM FLOAT
40. FLARED SUCTION ELBOW
41. WALL PACK LIGHT
42. SLUDGE SHOE
43. SCADA ANTENNA

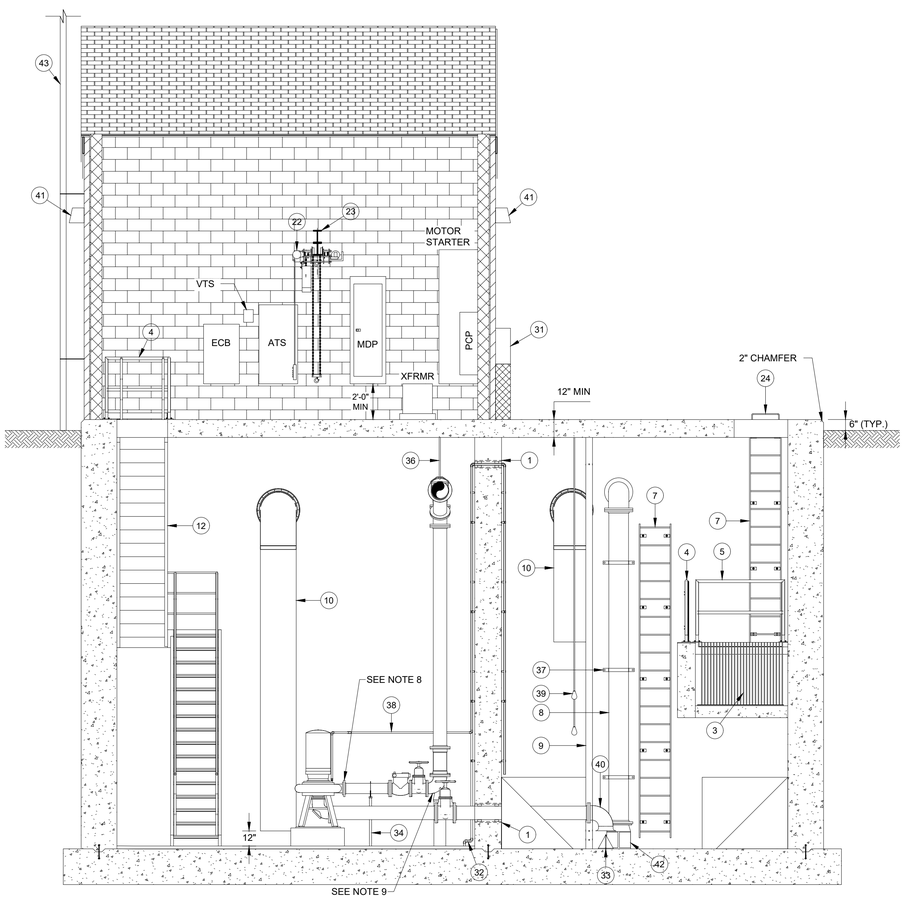

SECTION A

NOT TO SCALE

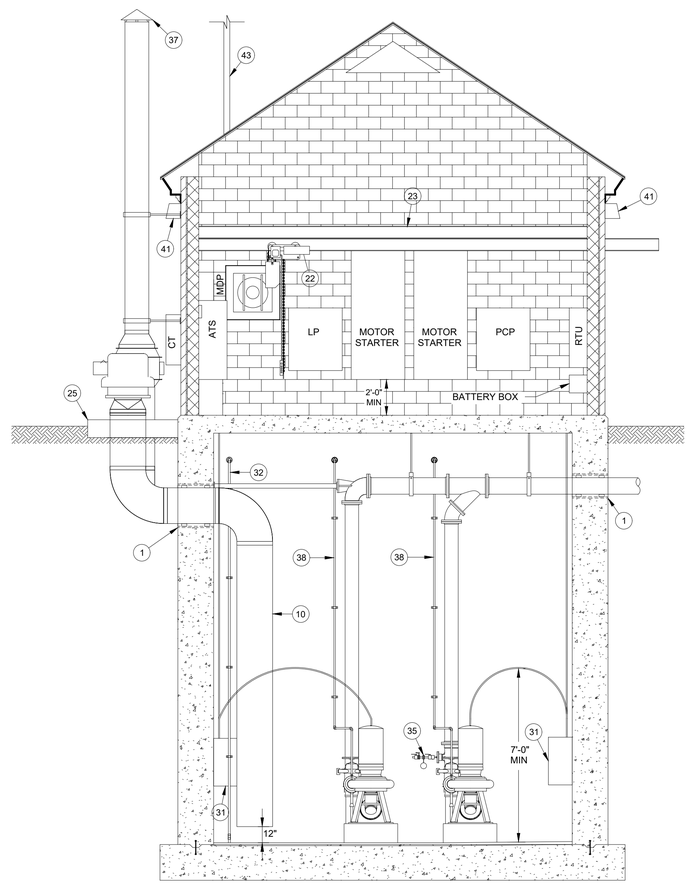

SECTION B

NOT TO SCALE

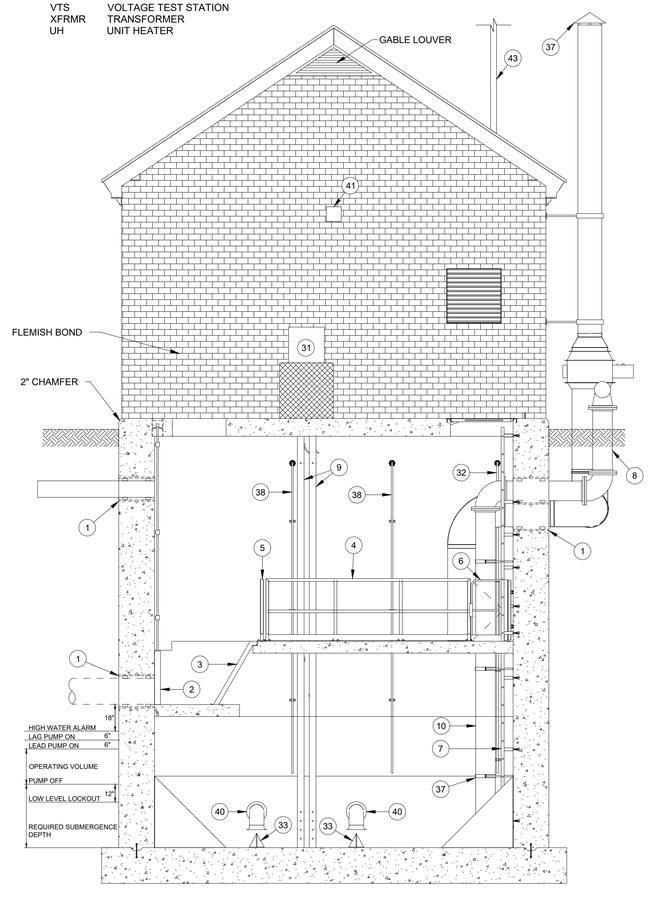

SECTION C

NOT TO SCALE

TEMPLATE DRAWING - NOT FOR CONSTRUCTION

Public Utilities

DATE: 10/2023

CITY OF VIRGINIA BEACH - PUBLIC UTILITIES
STANDARD DETAILS

SCHEMATIC WET WELL/DRY WELL PUMP STATION

SCALE: NOT TO SCALE

DRAWING NO. PU 7.3

SHEET NO. 1 OF 1

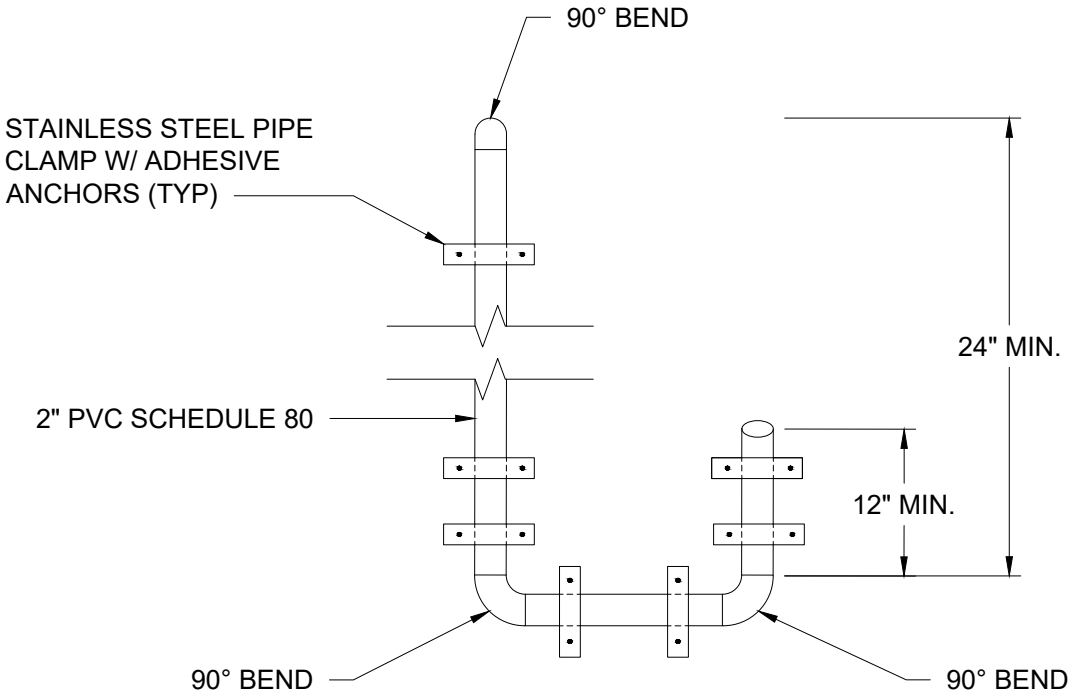

Public Utilities DATE: 10/2023	CITY OF VIRGINIA BEACH - PUBLIC UTILITIES STANDARD DETAILS	SCALE: NOT TO SCALE
	VALVE VAULT DRAIN	DRAWING NO. PU 7.4
		SHEET NO. 1 OF 1

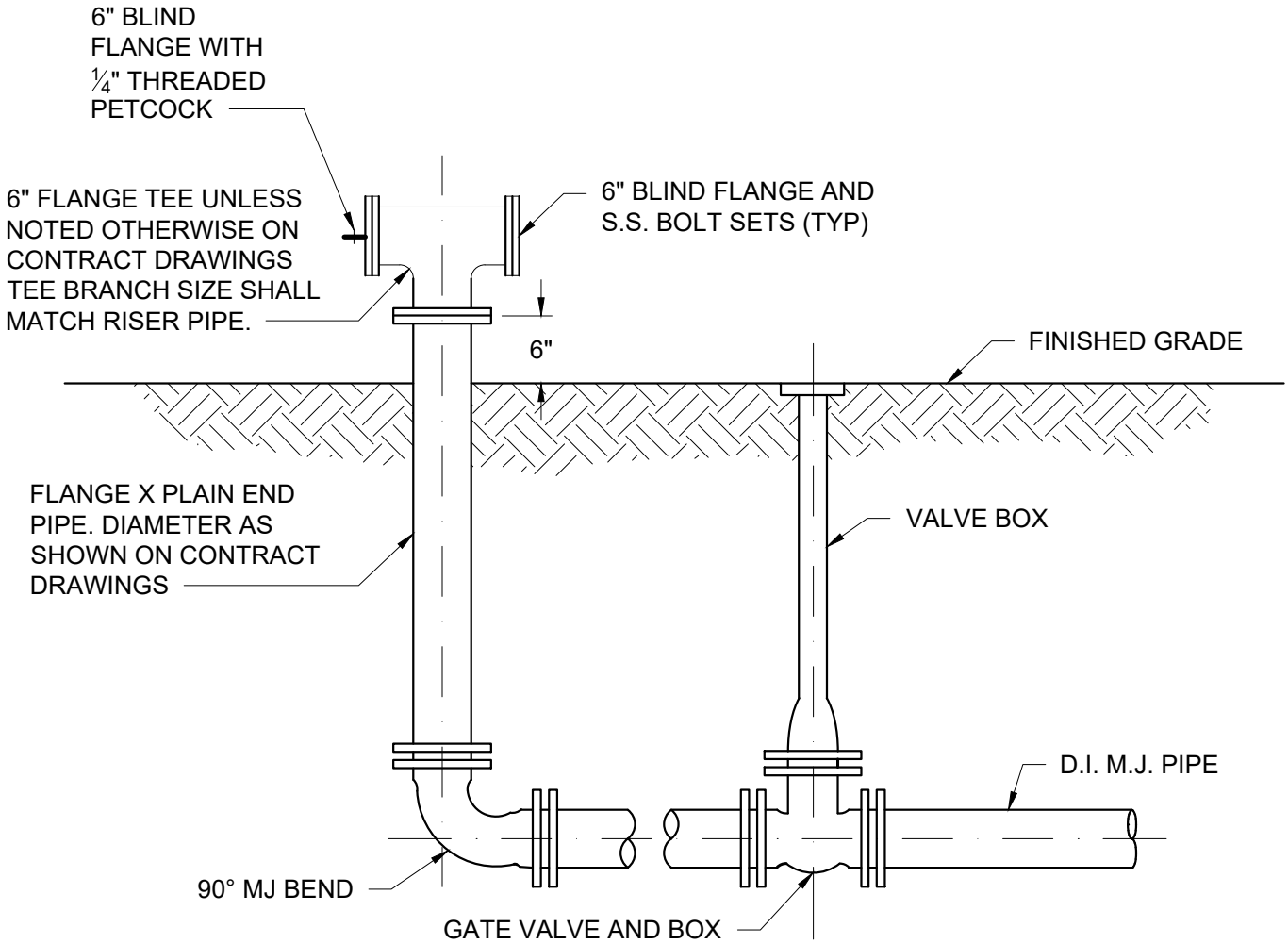

NOTE:

1. ALL PIPE SHALL BE RESTRAINED.

Public Utilities	CITY OF VIRGINIA BEACH - PUBLIC UTILITIES STANDARD DETAILS	SCALE: NOT TO SCALE
		DRAWING NO. PU 7.5
DATE: 10/2023	EMERGENCY PUMP CONNECTION (DISCHARGE)	SHEET NO. 1 OF 1

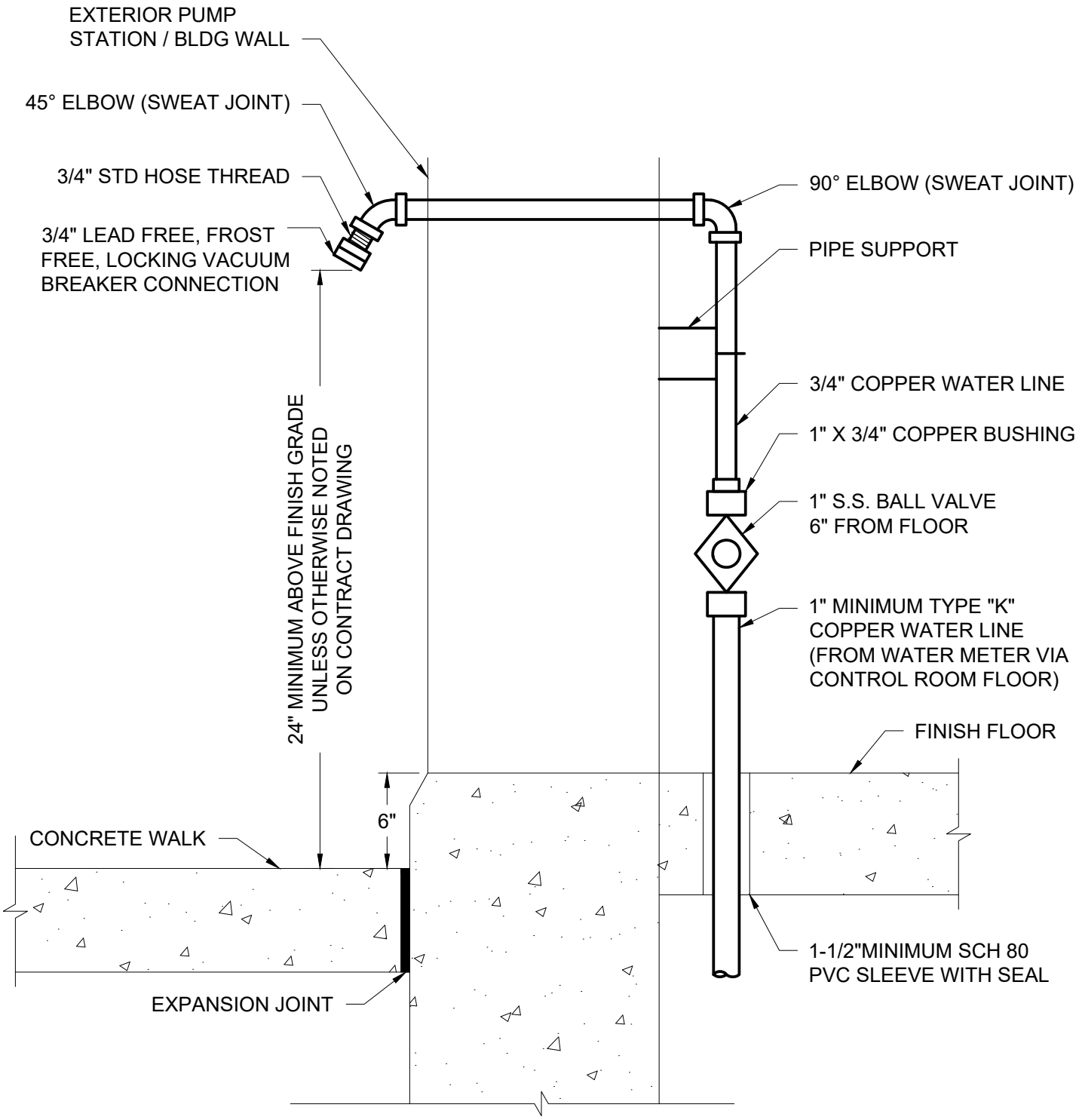

NOTE:

1. MATERIALS USED SHALL BE IN COMPLIANCE WITH PUBLIC LAW III-380, THE REDUCTION OF LEAD IN DRINKING WATER ACT. PRODUCT SHALL BE NSF 61-G CERTIFIED TO BE LEAD FREE.

VB Public Utilities	CITY OF VIRGINIA BEACH - PUBLIC UTILITIES STANDARD DETAILS	SCALE: NOT TO SCALE
		DRAWING NO. PU 7.6
DATE: 10/2023	WATER SERVICE CONFIGURATION	SHEET NO. 1 OF 1

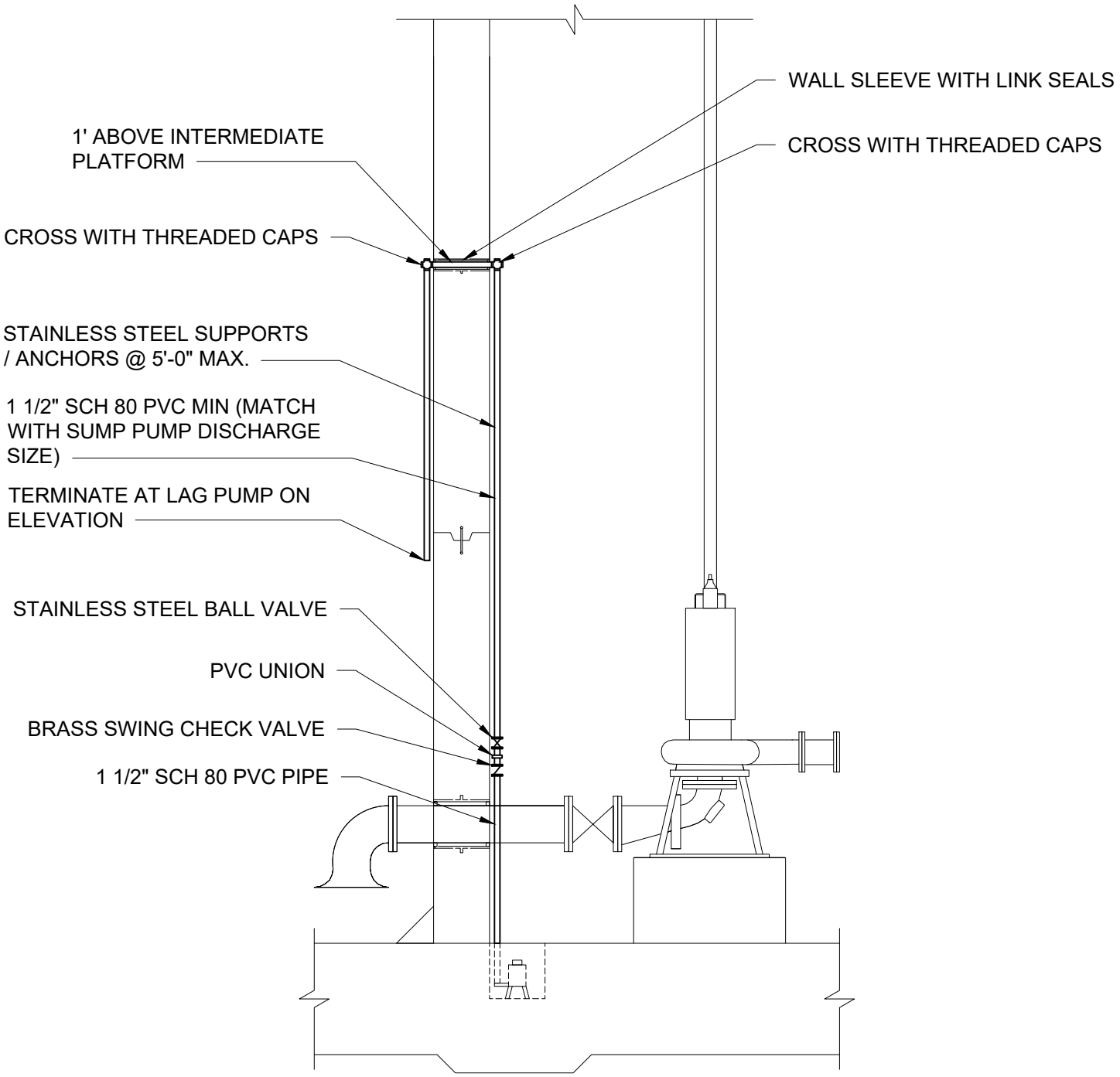

NOTE:

1. ALL VALVES / FITTINGS SHALL BE THREADED.

Public Utilities	CITY OF VIRGINIA BEACH - PUBLIC UTILITIES STANDARD DETAILS	SCALE: NOT TO SCALE
		DRAWING NO. PU 7.7
DATE: 10/2023	SUMP PUMP PIPING AND VALVE CONFIGURATION	SHEET NO. 1 OF 1

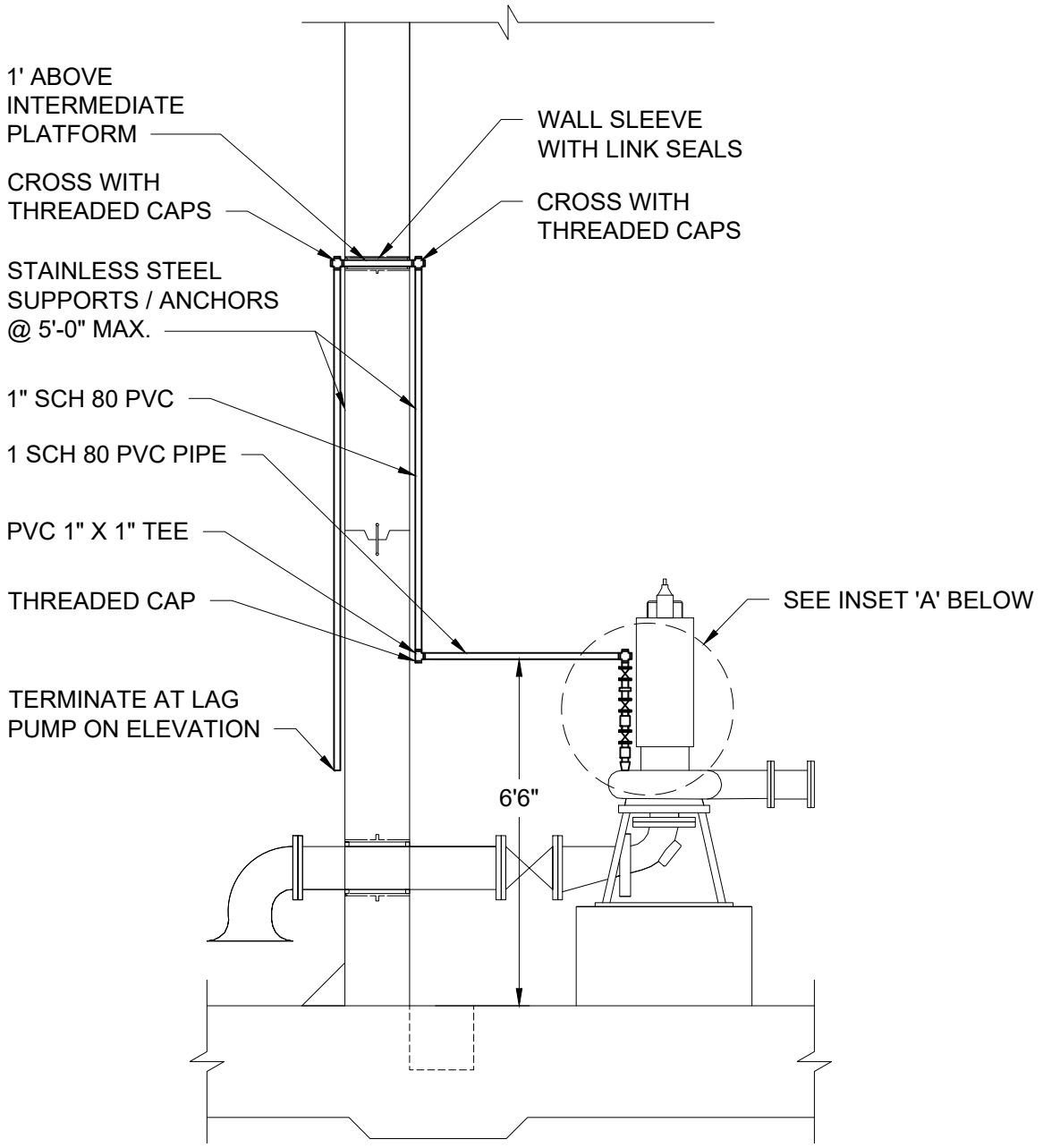

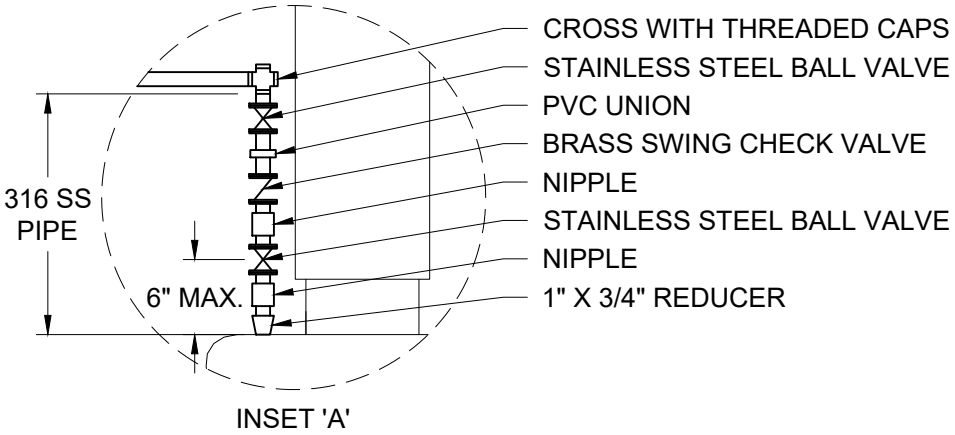

INSET 'A'

NOTE:

1. ALL VALVES / FITTINGS SHALL BE THREADED.

Public Utilities	CITY OF VIRGINIA BEACH - PUBLIC UTILITIES STANDARD DETAILS	SCALE: NOT TO SCALE
		DRAWING NO. PU 7.8
DATE: 10/2023	VOLUTE VENT PIPING AND VALVE CONFIGURATION	SHEET NO. 1 OF 1

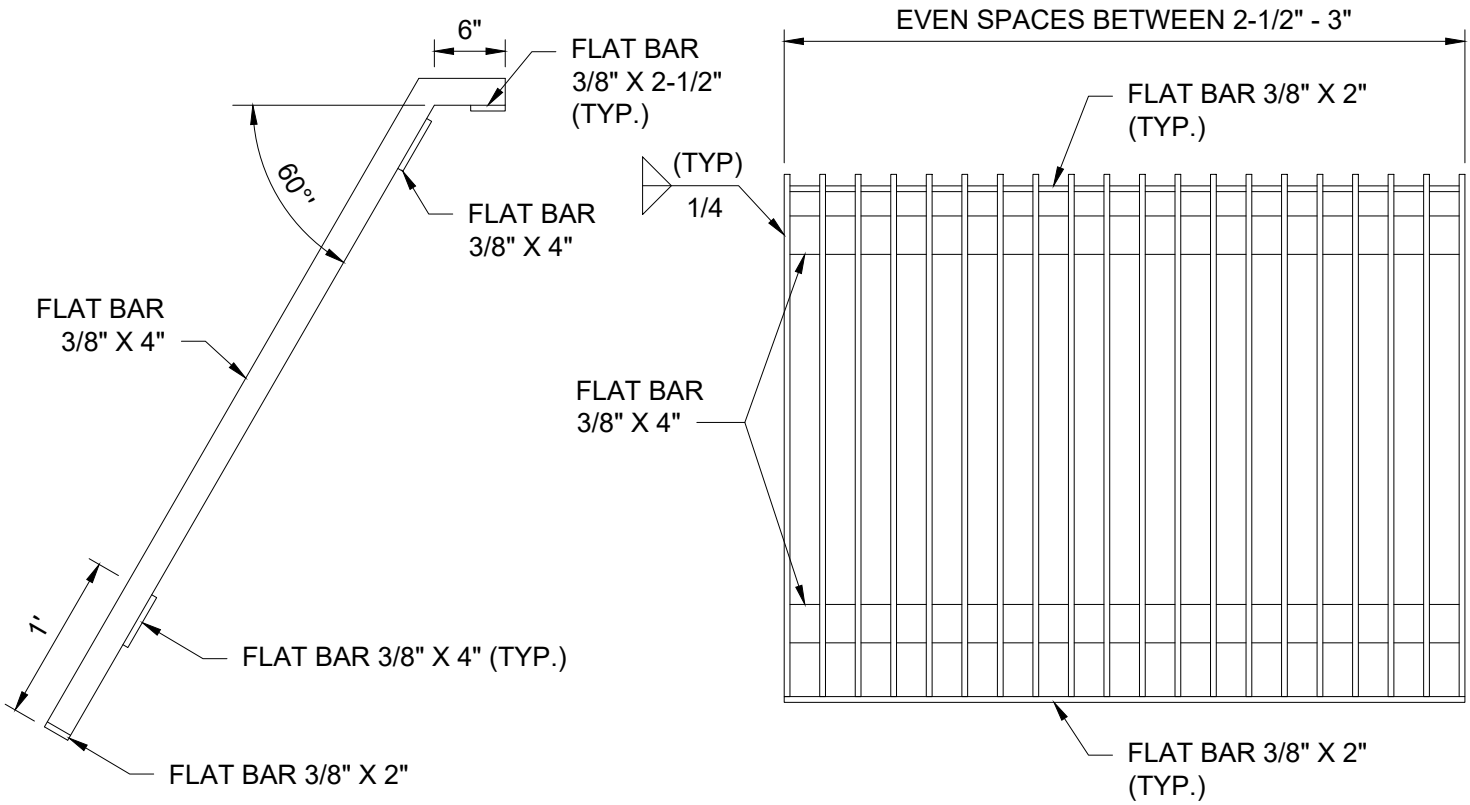

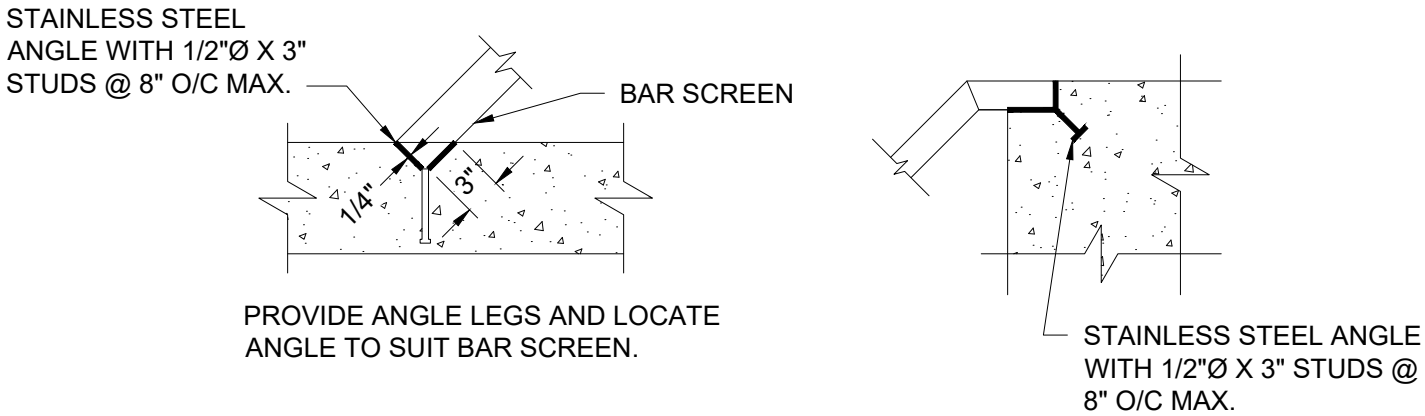

BAR SCREEN DETAILS

NOTES:

1. BAR SCREEN SHALL BE MANUFACTURED OF 6061-T6 ALUMINUM.
2. SEE STRUCTURAL DRAWING FOR PLATFORM AND CHANNEL CONFIGURATIONS.

Public Utilities	CITY OF VIRGINIA BEACH - PUBLIC UTILITIES STANDARD DETAILS	SCALE: NOT TO SCALE
		DRAWING NO. PU 7.9
DATE: 10/2023	BAR SCREEN	SHEET NO. 1 OF 1

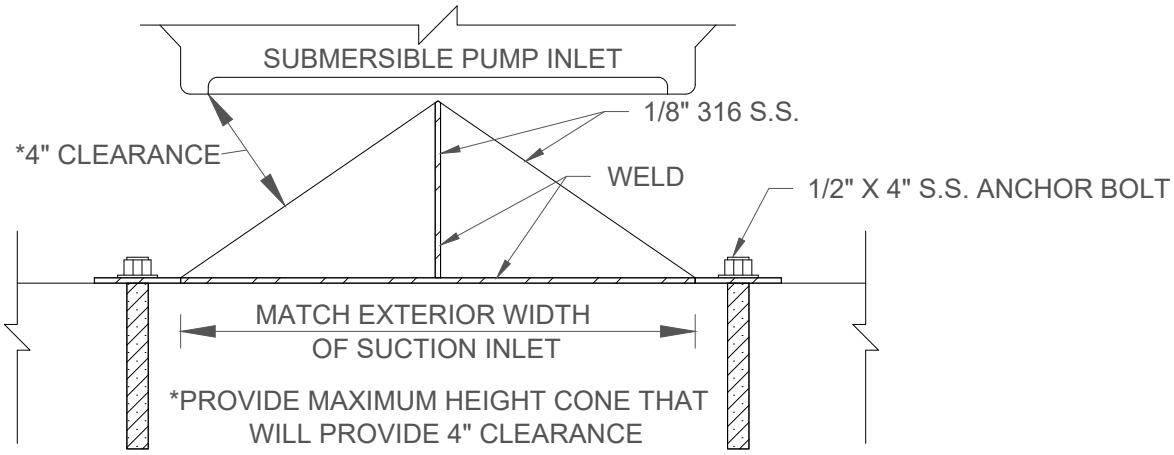

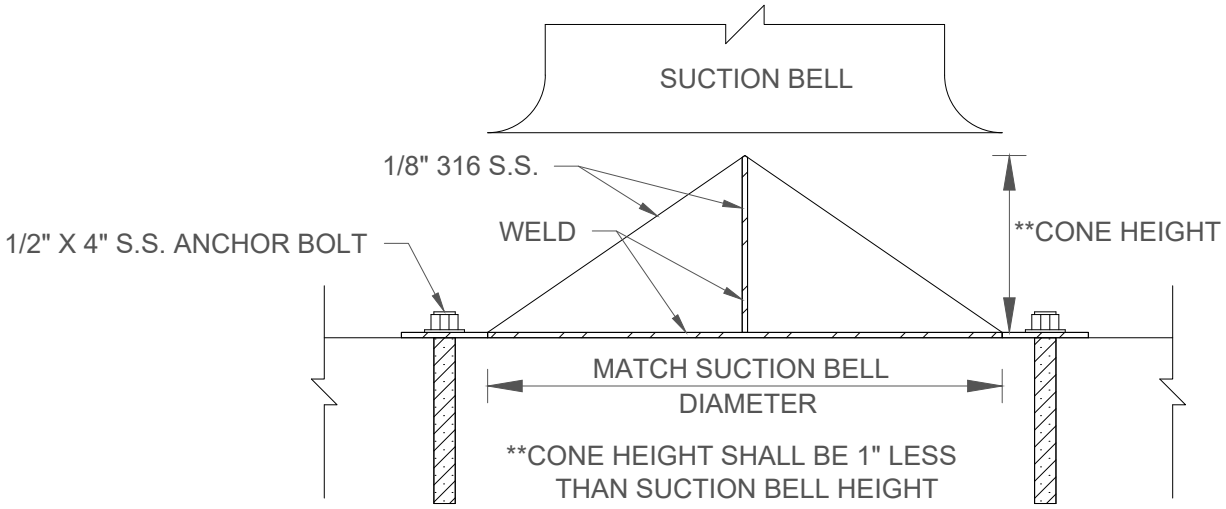

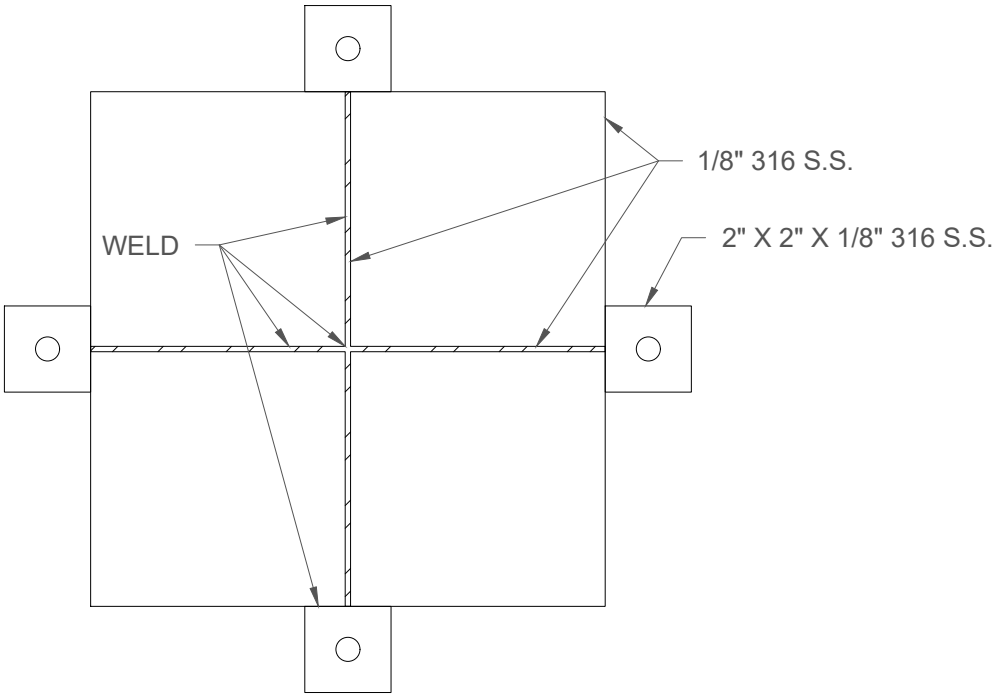

Public Utilities DATE: 10/2023	CITY OF VIRGINIA BEACH - PUBLIC UTILITIES STANDARD DETAILS	SCALE: NOT TO SCALE
	ANTI-VORTEX CONE	DRAWING NO. PU 7.10
		SHEET NO. 1 OF 1

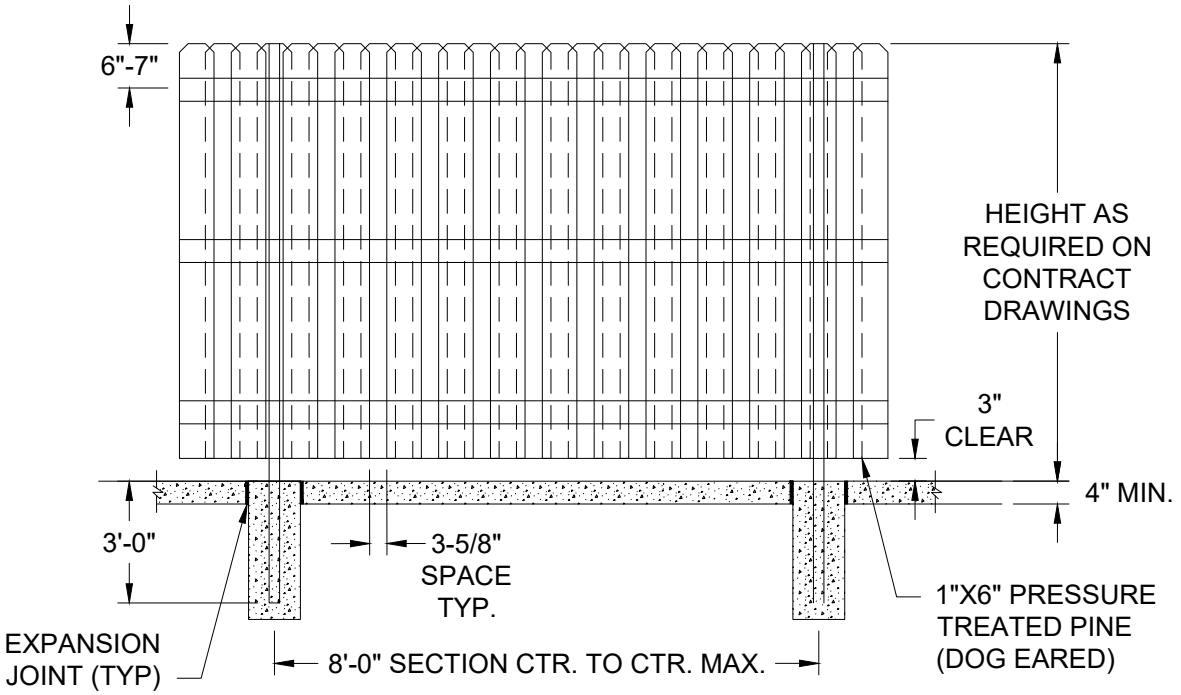

ELEVATION

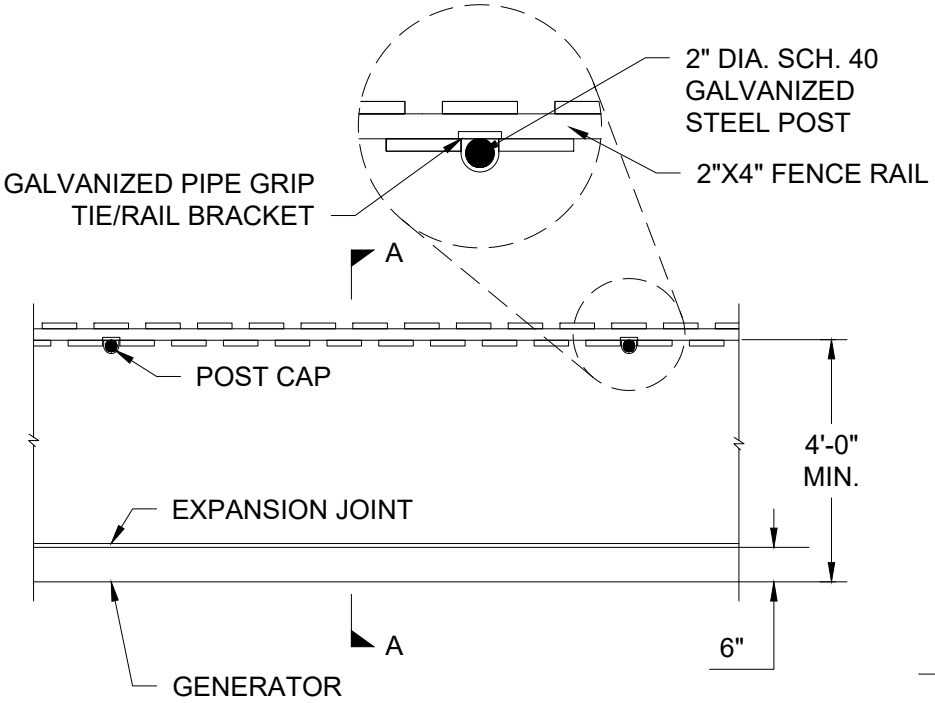

PLAN

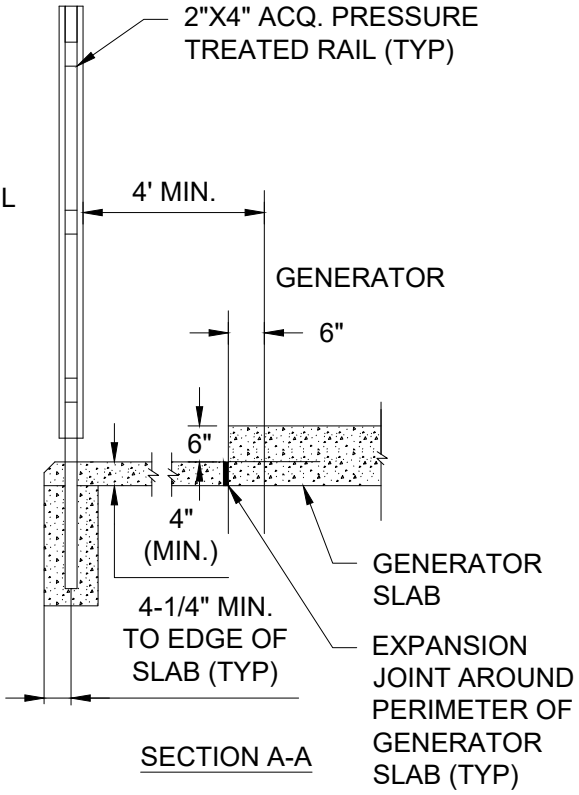

SECTION A-A

NOTES

1. ALL LUMBER SHALL BE PRESSURE TREATED SOUTHERN YELLOW PINE NO. 1.

2. ALL FASTENERS AND MISCELLANEOUS HARDWARE SHALL BE APPROVED FOR USE WITH ALKALINE COPPER QUARTERNARY (ACQ) LUMBER.

Public Utilities	CITY OF VIRGINIA BEACH - PUBLIC UTILITIES STANDARD DETAILS	SCALE: NOT TO SCALE
		DRAWING NO. PU 7.11
DATE: 10/2023	SHADOWBOX FENCE	SHEET NO. 1 OF 1

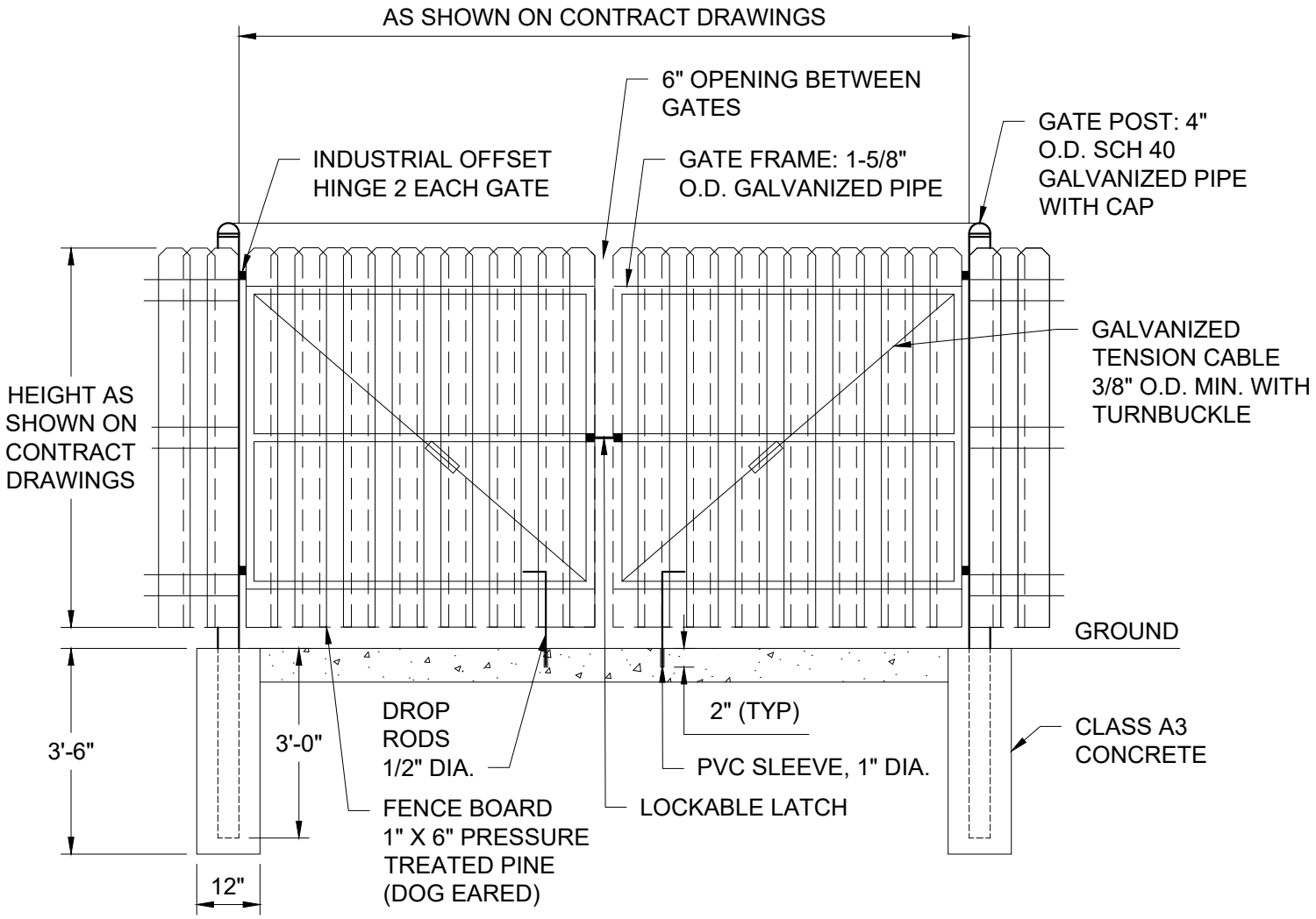

ELEVATION

NOTES:

1. ALL LUMBER SHALL BE PRESSURE TREATED SOUTHERN YELLOW PINE NO. 1.

2. ALL FASTENERS AND MISCELLANEOUS HARDWARE SHALL BE APPROVED FOR USE WITH ALKALINE COPPER QUATERNARY (ACQ) LUMBER.

Public Utilities	CITY OF VIRGINIA BEACH - PUBLIC UTILITIES STANDARD DETAILS	SCALE: NOT TO SCALE
		DRAWING NO. PU 7.12
DATE: 10/2023	FENCE GATE	SHEET NO. 1 OF 1

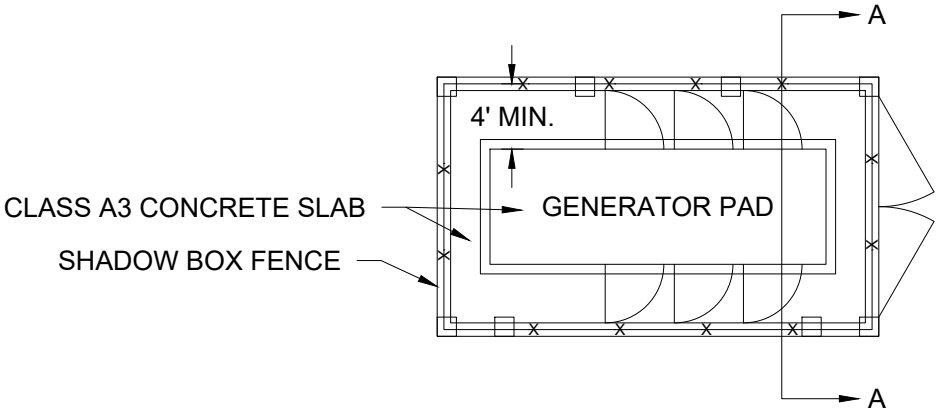

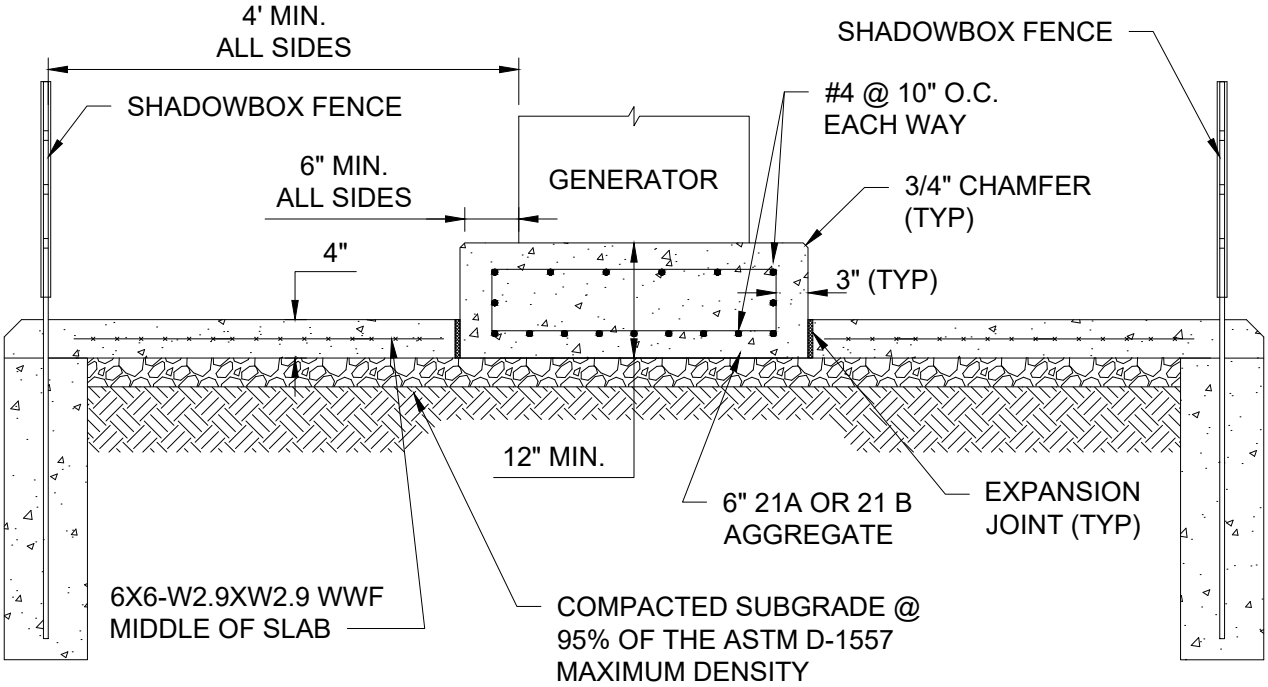

SECTION A-A

Public Utilities	CITY OF VIRGINIA BEACH - PUBLIC UTILITIES STANDARD DETAILS	SCALE: NOT TO SCALE
		DRAWING NO. PU 7.13
DATE: 10/2023	GENERATOR ENCLOSURE PAD	SHEET NO. 1 OF 1

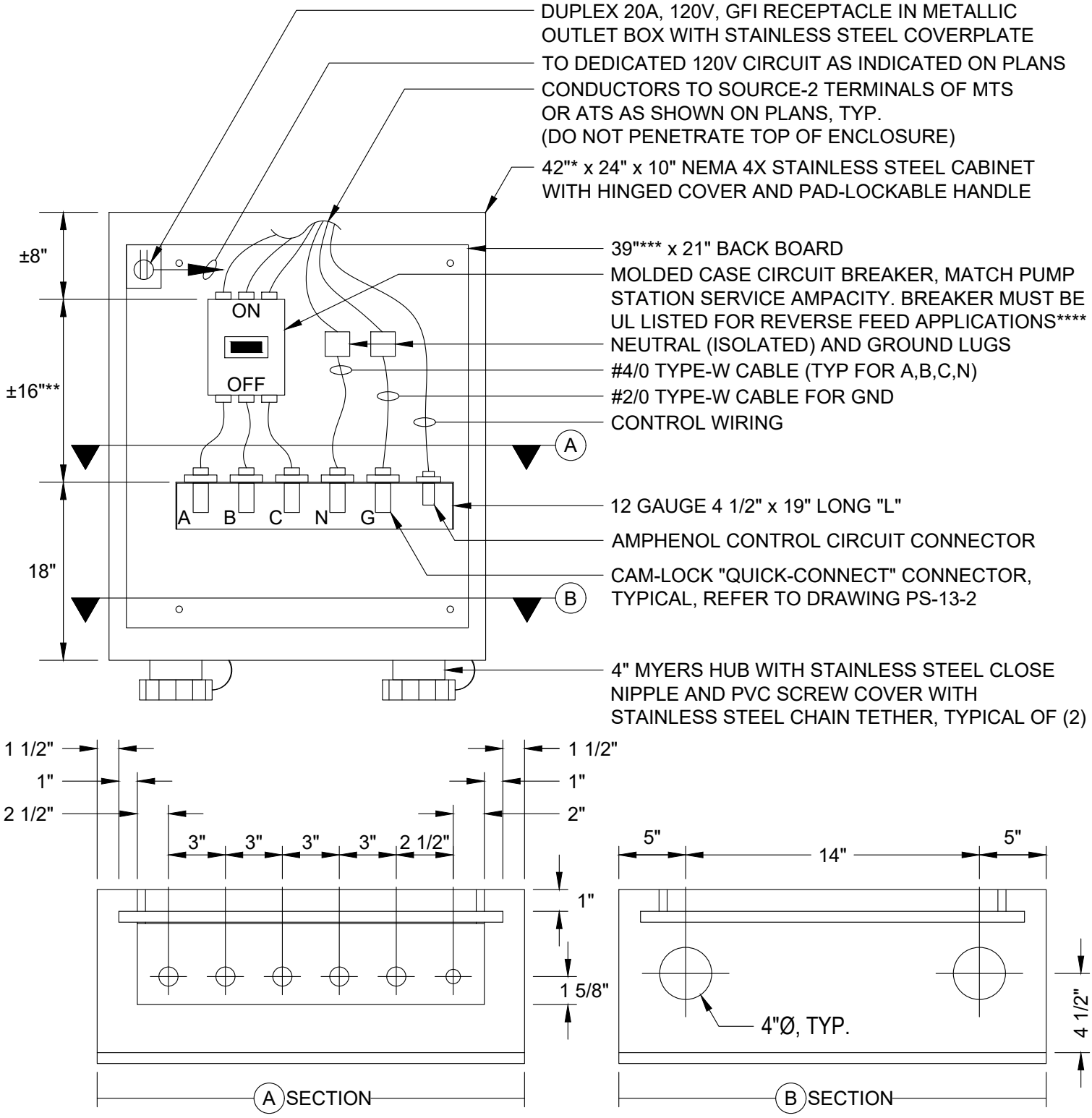

* FOR CIRCUIT BREAKERS 600A AND GREATER, PROVIDE MINIMUM 48" TALL ENCLOSURE

** ±22" WHERE 600A CIRCUIT BREAKERS ARE PROVIDED

*** 45" WHERE 600A CIRCUIT BREAKERS ARE PROVIDED

**** CIRCUIT BREAKER SHALL BE MOUNTED WITH THE OPERATING HANDLE IN THE UP POSITION WHEN ON

Public Utilities	CITY OF VIRGINIA BEACH - PUBLIC UTILITIES STANDARD DETAILS	SCALE: NOT TO SCALE
		DRAWING NO. PU 7.14
	QUICK-CONNECT BOX	SHEET NO. 1 OF 2
DATE: 10/2023		

"QUICK CONNECT" CONNECTOR SCHEDULE		
CONNECTOR	208 / 240V (FEMALE) CONNECTOR / CAP	480V (MALE) CONNECTOR / CAP
AØ	16R22-E / 16P22-E	16R21-H / 16P21-H
BØ ****	16R22-R / 16P22-R	16R21-O / 16P21-O
CØ	16R22-B / 16P22-B	16R21-Y / 16P21-Y
N	16R22-W / 16P22-W	16R21-W / 16P21-W
GND	16R21-G / 16P21-G	16R21-G / 16P21-G
AMPHENOL	MS3102A14S-6S	

NOTES:

1. **** THE B-PHASE WILL BE A HIGH-LEG WHEN ON PORTABLE GENERATOR SERVICE AT 240-VOLTS. CONTRACTOR SHALL ENSURE THAT THE B-PHASE IS NOT CONNECTED TO ANY SINGLE-PHASE LOADS (SUCH AS LIGHTING, RECEPTACLES, OR CONTROL CIRCUITS), AND MAKE ANY NECESSARY CIRCUIT MODIFICATIONS TO ACCOMPLISH SUCH.

2. CATALOG NUMBERS INDICATED IN SCHEDULE FOR PHASE, NEUTRAL, AND GND ARE FOR SINGLE POLE FLUSH MOUNTED CAM-TYPE CONNECTORS, RATED 400A, 600V, DOUBLE SET- SCREW STYLE. APPROVED SUBSTITUTIONS ARE ACCEPTABLE FOR THE CONNECTORS SPECIFIED. CONTRACTOR SHALL PROVIDE EACH PHASE, NEUTRAL, AND GND CONNECTOR WITH A PROTECTIVE CAP THAT CORRESPONDS TO THE CONNECTOR BEING PROVIDED. SECURE CAPS TO CONNECTION BOX ENCLOSURE WITH STAINLESS STEEL CHAINS TO PREVENT LOSS.

3. MOUNT CONNECTORS IN THE QUICK-CONNECT CONNECTION BOX ENCLOSURE AS NOTED AND/OR DETAILED. CONNECT EACH PHASE AND N TO THE APPROPRIATE POLE/LUG OF THE “EMERGENCY” SOURCE INPUT CIRCUIT BREAKER OR NEUTRAL LUG IN THE CONNECTION BOX WITH A #4/0 “EXTRA FLEXIBLE” TYPE-W CABLE RATED FOR 405A. CONNECT THE GND TO THE GND LUG IN THE CONNECTION BOX WITH A #2/0 TYPE-W CABLE AS SPECIFIED ABOVE.

4. COORDINATE FINAL REQUIREMENTS AND MOUNTING WITH OWNER PRIOR TO ORDERING COMPONENTS, AND PRIOR TO INSTALLING IN CONNECTION BOX OR CONNECTING TO ATS/MTS.

5. PROVIDE A FLUSH MOUNTED OUTLET, AMPHENOL TYPE 6-PIN RECEPTACLE IN THE QUICK-CONNECT CONNECTION BOX, AND CONNECT TO ATS CONTROL INPUTS. CONNECT THE CONTROL/SIGNAL CONNECTOR TO THE ATS WITH A 6-CONDUCTOR TYPE SOOW CABLE TO PROVIDE FOR REMOTE ENGINE START CONTROL AND TO TRANSFER THE SWITCH POSITION.

6. PROVIDE (1) 50' CONTROL/SIGNAL CABLE, 6-CONDUCTOR TYPE SOOW, WITH AMPHENOL "MS3106A14S-6P" 6-PIN MALE CONNECTOR ON ONE END. LEAVE CABLE COILED UP IN QUICK-CONNECT BOX FOR USE BY OWNER.

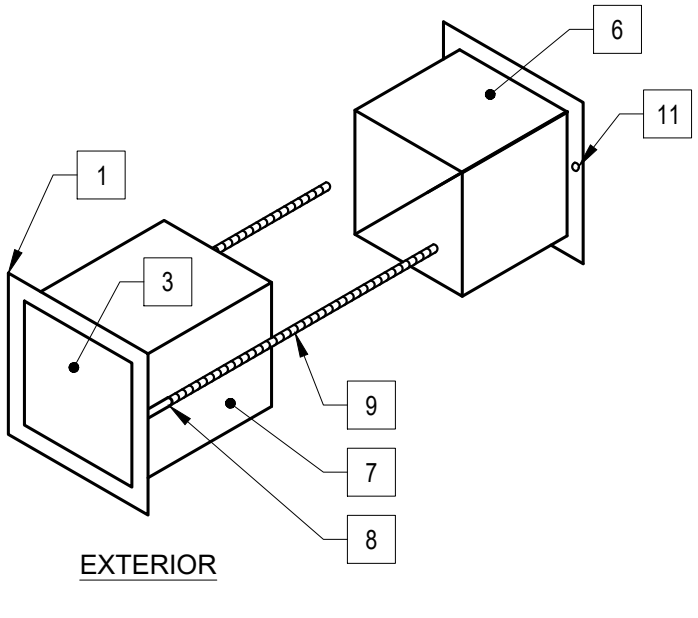

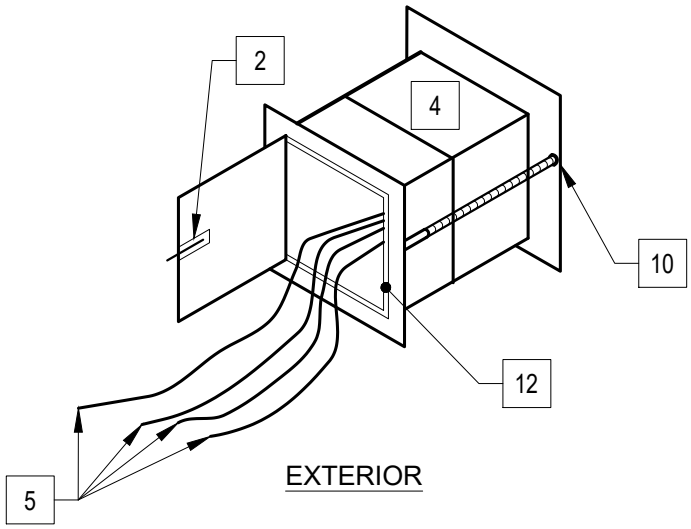

DETAIL NOTES:

1. 2" FLANGE WITH A ONE PIECE RUBBER GASKET, 1/8" THICK.
2. SLIDING BOLT MOUNTED ON THE INSIDE OF DOOR.
3. WATERTIGHT DOOR TO EXTERIOR.
4. ALL JOINTS AND SEAMS SHALL BE WELDED AND FINISHED.
5. TEMPORARY POWER CORD (BY OTHERS).
6. INTERIOR SIDE - 10.25OD X 10.25OD X 8" DEEP, 316L-16 GAUGE STEEL, OPEN TO INTERIOR.
7. EXTERIOR SIDE - 10"OD X 10"OD X 8" DEEP, 316L-16 GAUGE STEEL,
8. 5/16" ROD COUPLING, STAINLESS STEEL, WELDED TO FLANGE.
9. 5/16" X 18" LONG STAINLESS STEEL ROD.
10. AFTER INSTALLATION USING STAINLESS STEEL WASHERS AND STAINLESS STEEL LOCKING NUT, CUT ROD TO SUIT (MINIMUM 3 THREADS EXPOSED).
11. 5/16" HOLE FOR THREADED ROD PENETRATION
12. 5/16" FLANGE/DOOR STOP ON TOP AND NON-HINGED SIDE.
13. INSTALL "THRU-WALL ACCESS" AT A POSITION IN PUMP STATION WALL BETWEEN THE DRIVEWAY LOCATION AND THE QUICK CONNECT BOX TO THE EXTENT POSSIBLE AND AT A MINIMUM OF 24" ABOVE THE FINISHED FLOOR ELEVATION.
14. THIS DETAIL IS ONLY USED WHEN THE QUICK CONNECTION BOX IS LOCATED INSIDE THE PUMP STATION.

Public Utilities DATE: 10/2023	CITY OF VIRGINIA BEACH - PUBLIC UTILITIES STANDARD DETAILS	SCALE: NOT TO SCALE
	THRU-WALL ACCESS	DRAWING NO. PU 7.15
		SHEET NO. 1 OF 1

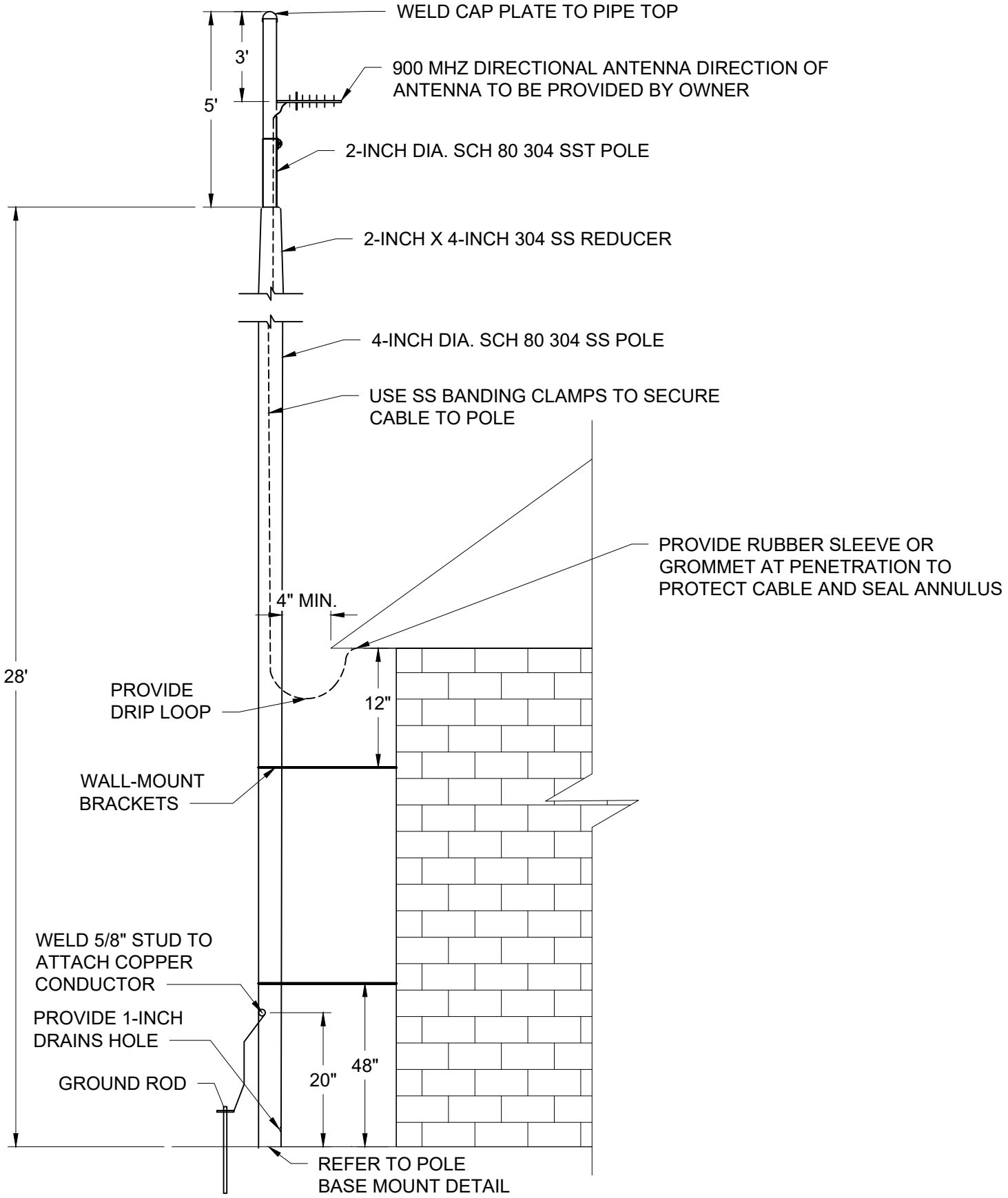

Public Utilities	CITY OF VIRGINIA BEACH - PUBLIC UTILITIES STANDARD DETAILS	SCALE: NOT TO SCALE
		DRAWING NO. PU 7.16
DATE: 10/2023	ANTENNA MAST SYSTEM	SHEET NO. 1 OF 3

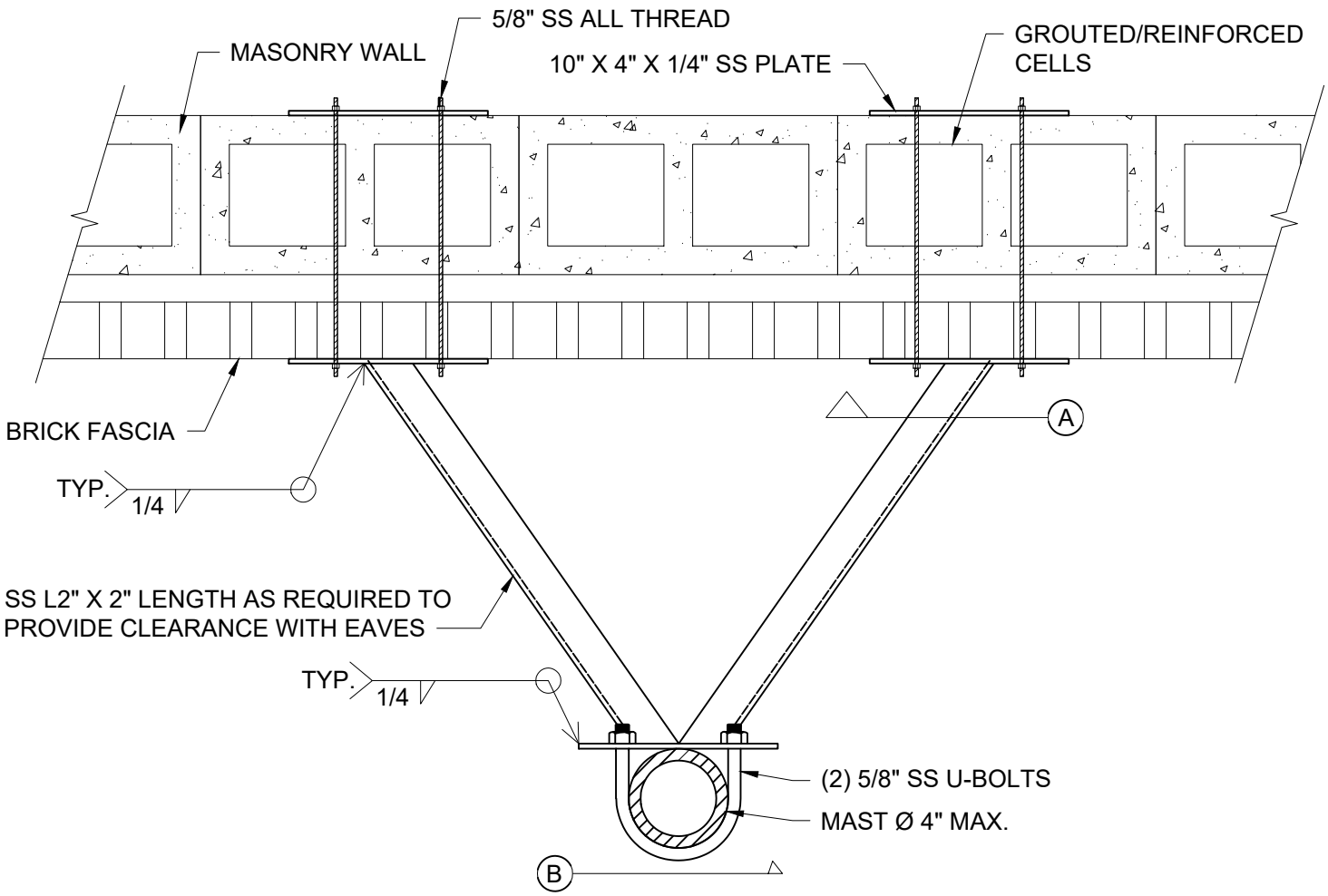

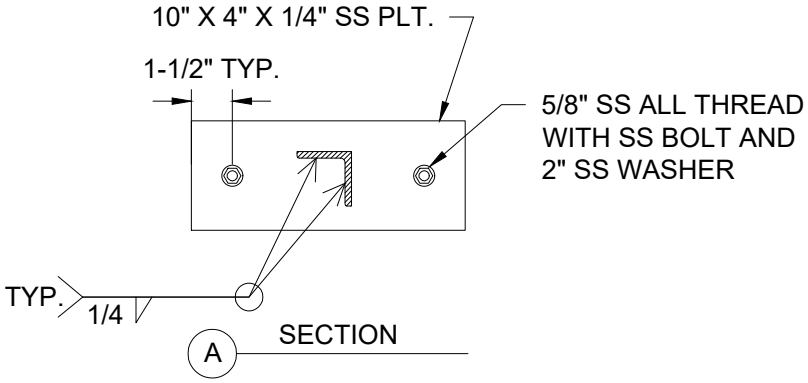

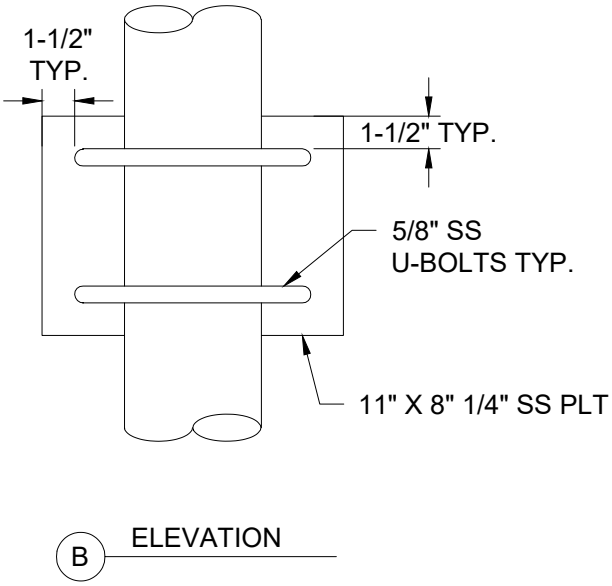

Public Utilities DATE: 10/2023	CITY OF VIRGINIA BEACH - PUBLIC UTILITIES STANDARD DETAILS	SCALE: NOT TO SCALE
	ANTENNA MAST SYSTEM	DRAWING NO. PU 7.16
		SHEET NO. 2 OF 3

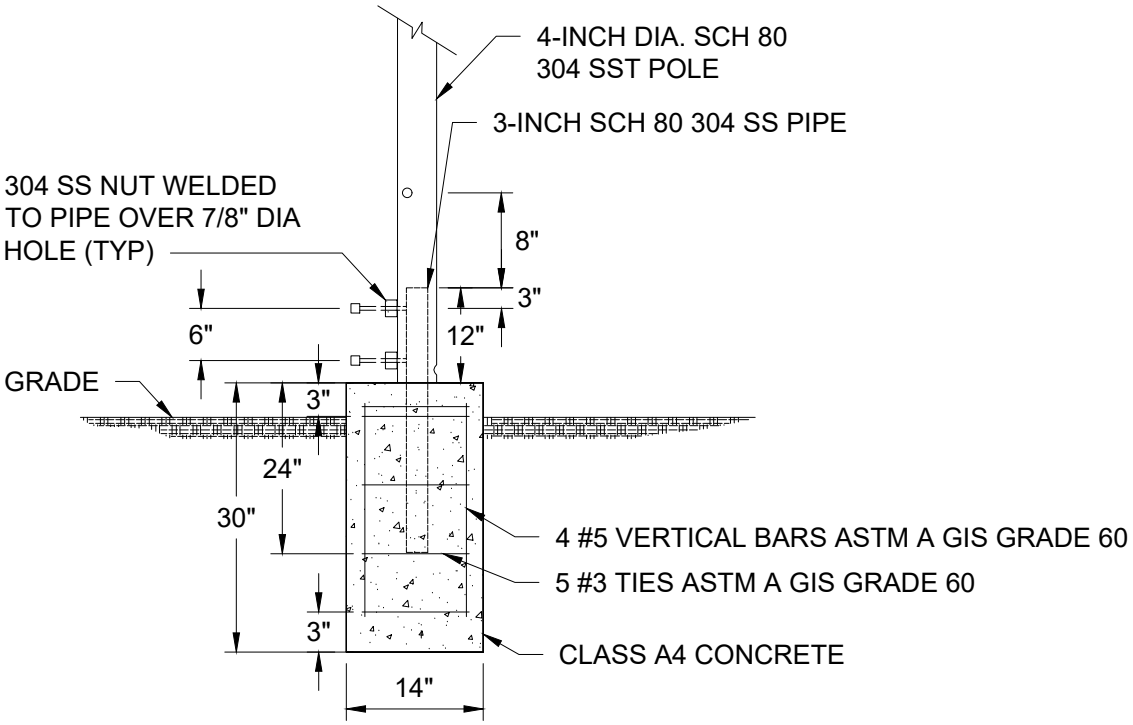

POLE BASE MOUNT DETAIL - EMBEDDED

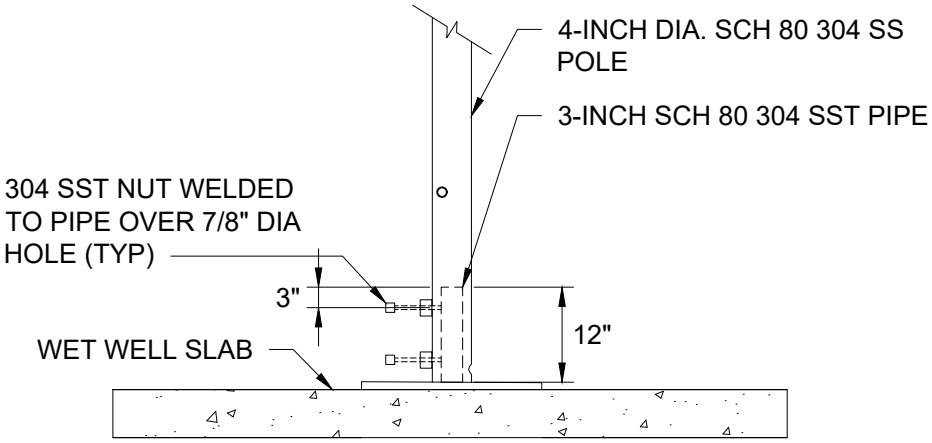

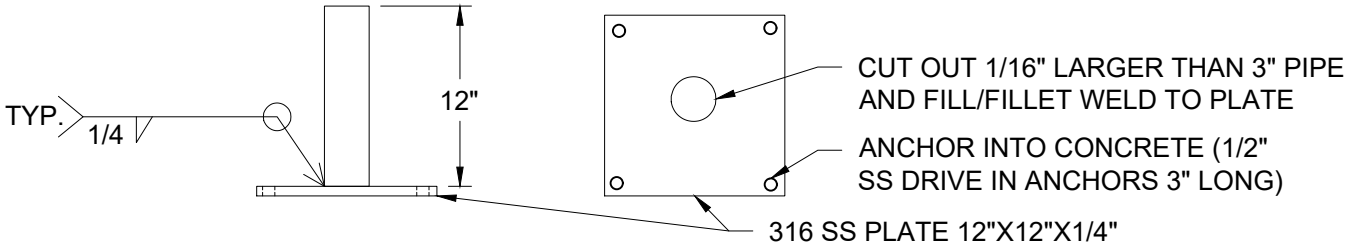

POLE BASE MOUNT - TOP SLAB

Public Utilities	CITY OF VIRGINIA BEACH - PUBLIC UTILITIES STANDARD DETAILS	SCALE: NOT TO SCALE
		DRAWING NO. PU 7.16
	ANTENNA MAST SYSTEM	SHEET NO. 3 OF 3
DATE: 10/2023		

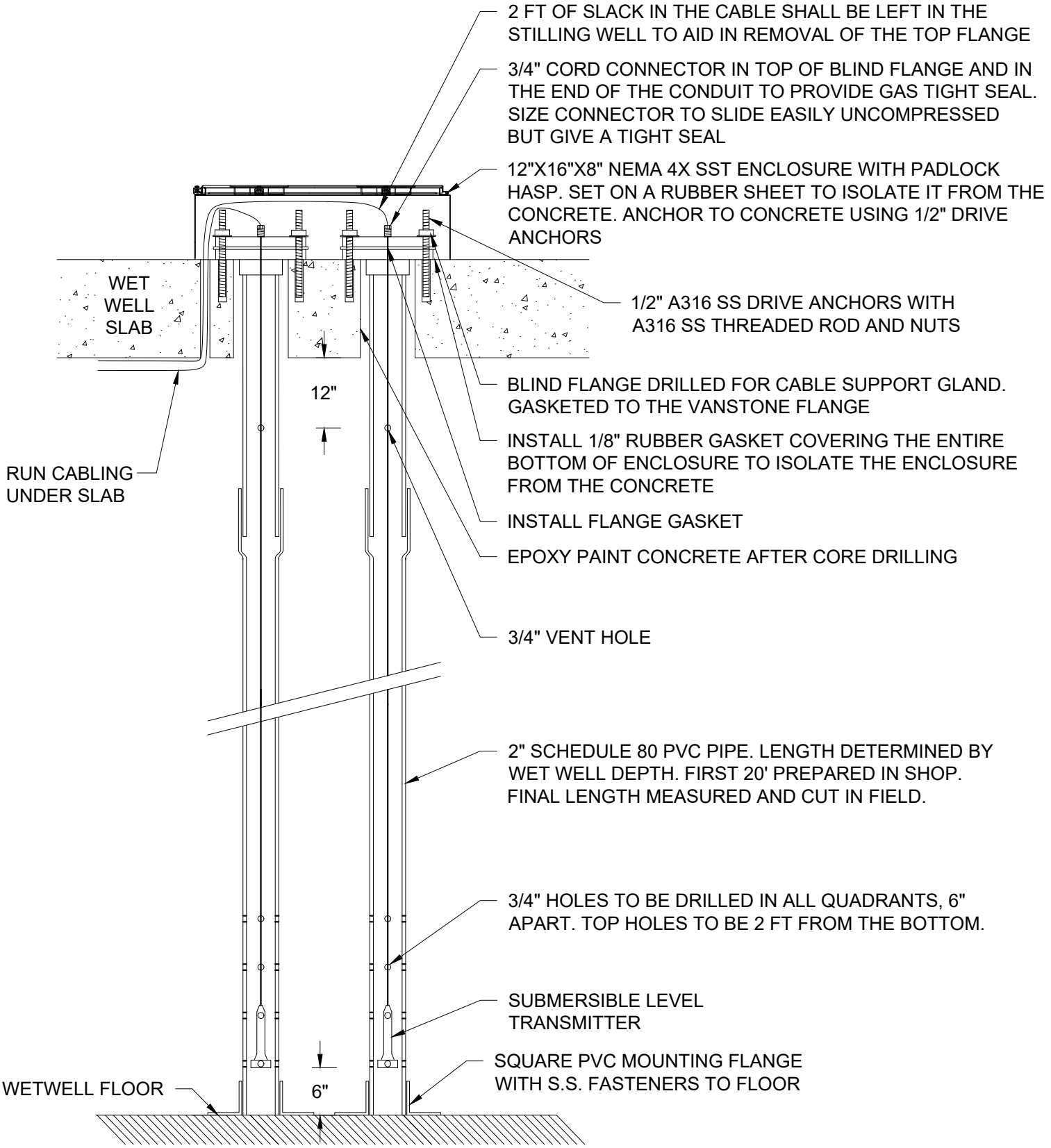

Public Utilities	CITY OF VIRGINIA BEACH - PUBLIC UTILITIES STANDARD DETAILS	SCALE: NOT TO SCALE
		DRAWING NO. PU 7.17
DATE: 10/2023	STILLING WELL - DUAL 2 INCH	SHEET NO. 1 OF 1

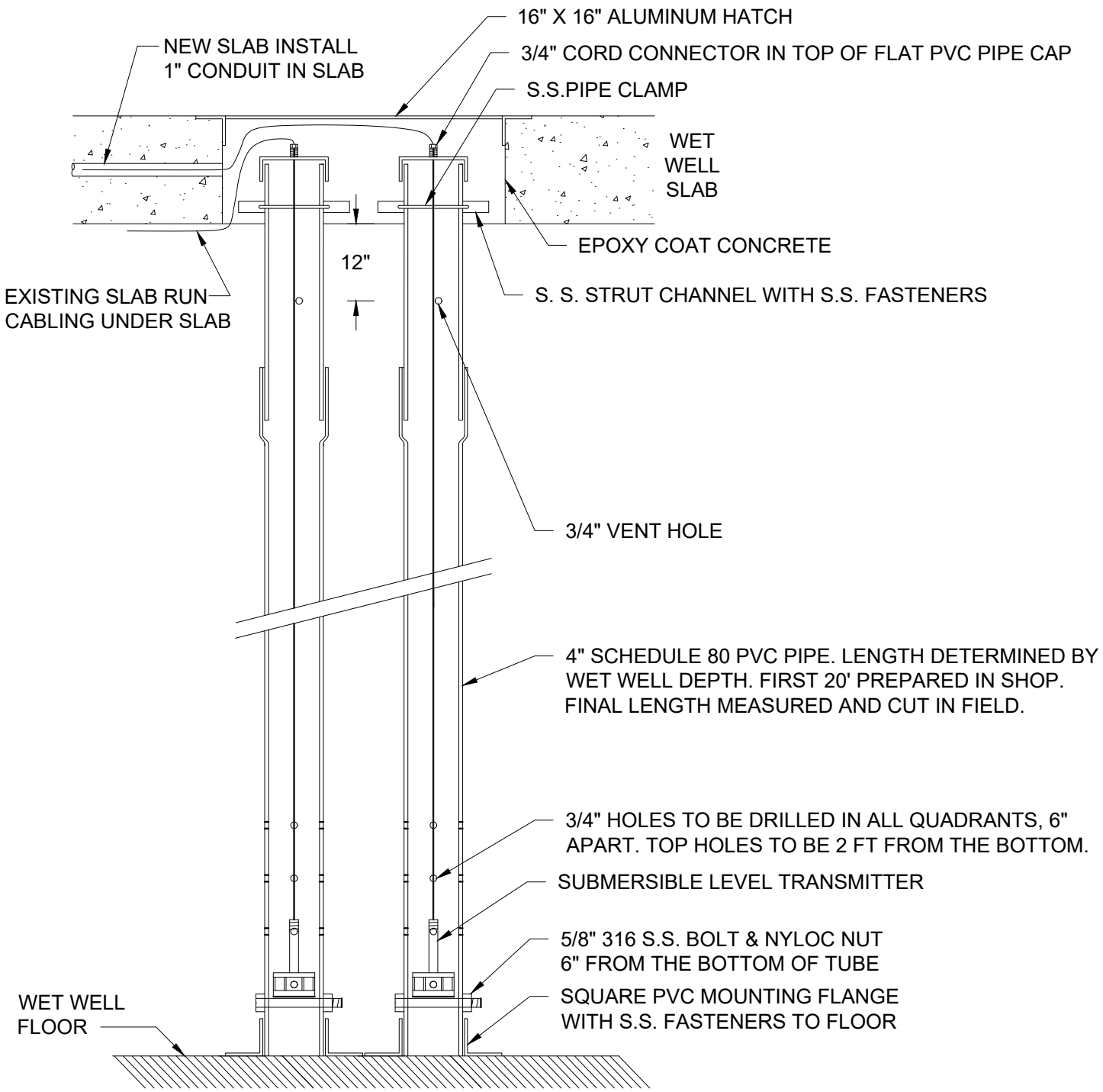

Public Utilities	CITY OF VIRGINIA BEACH - PUBLIC UTILITIES STANDARD DETAILS	SCALE: NOT TO SCALE
	STILLING WELL - DUAL 4 INCH	DRAWING NO. PU 7.18
DATE: 10/2023		SHEET NO. 1 OF 1

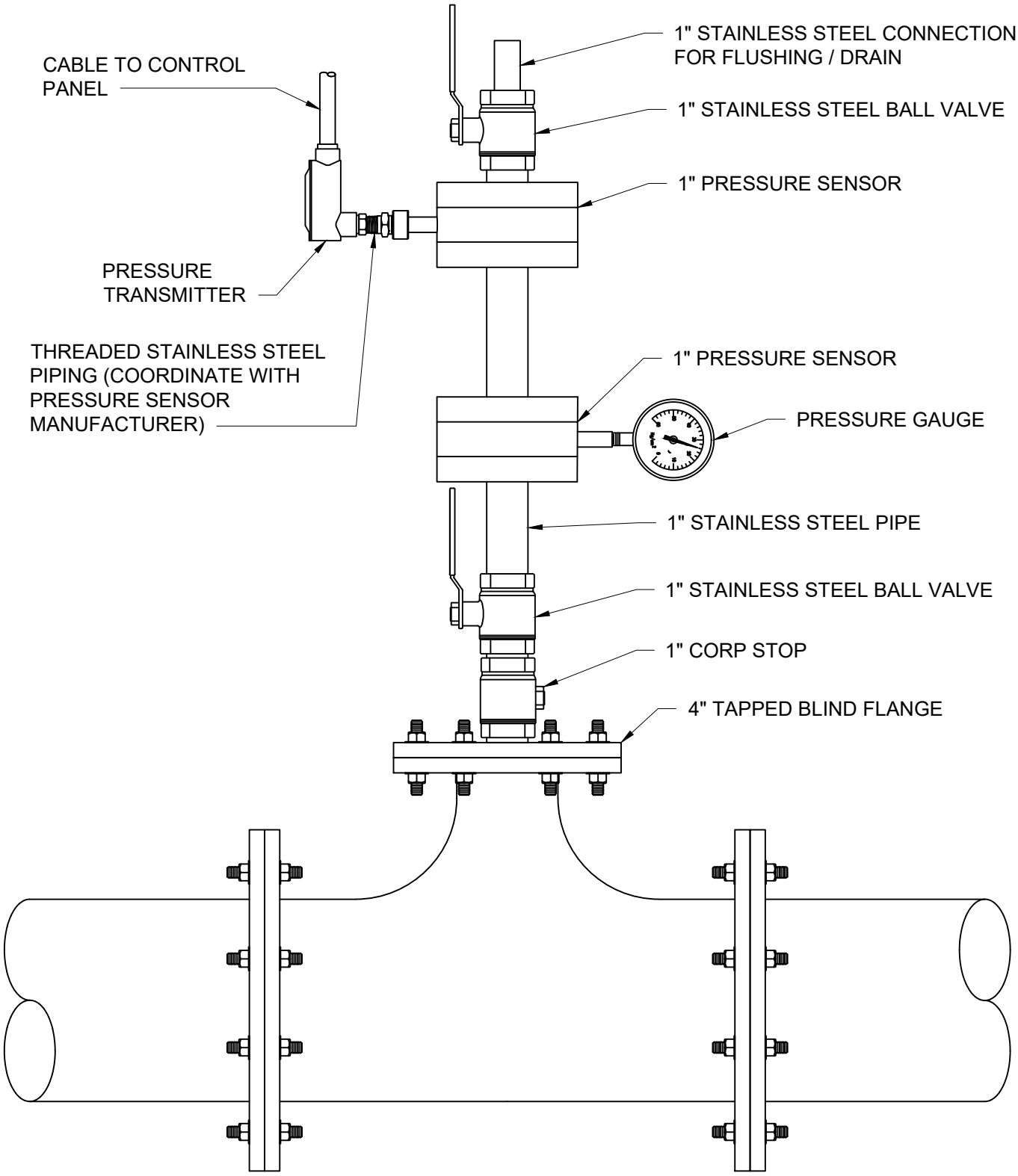

NOTE:

1. THE TAPPED TEE MAY BE REPLACED WITH A 1" STAINLESS STEEL TAPPING SADDLE WHEN IT IS NOT FEASIBLE TO INSTALL A TEE.

VB Public Utilities	CITY OF VIRGINIA BEACH - PUBLIC UTILITIES STANDARD DETAILS	SCALE: NOT TO SCALE
		DRAWING NO. PU 7.19
DATE: 10/2023	PRESSURE SENSOR ASSEMBLY	SHEET NO. 1 OF 1

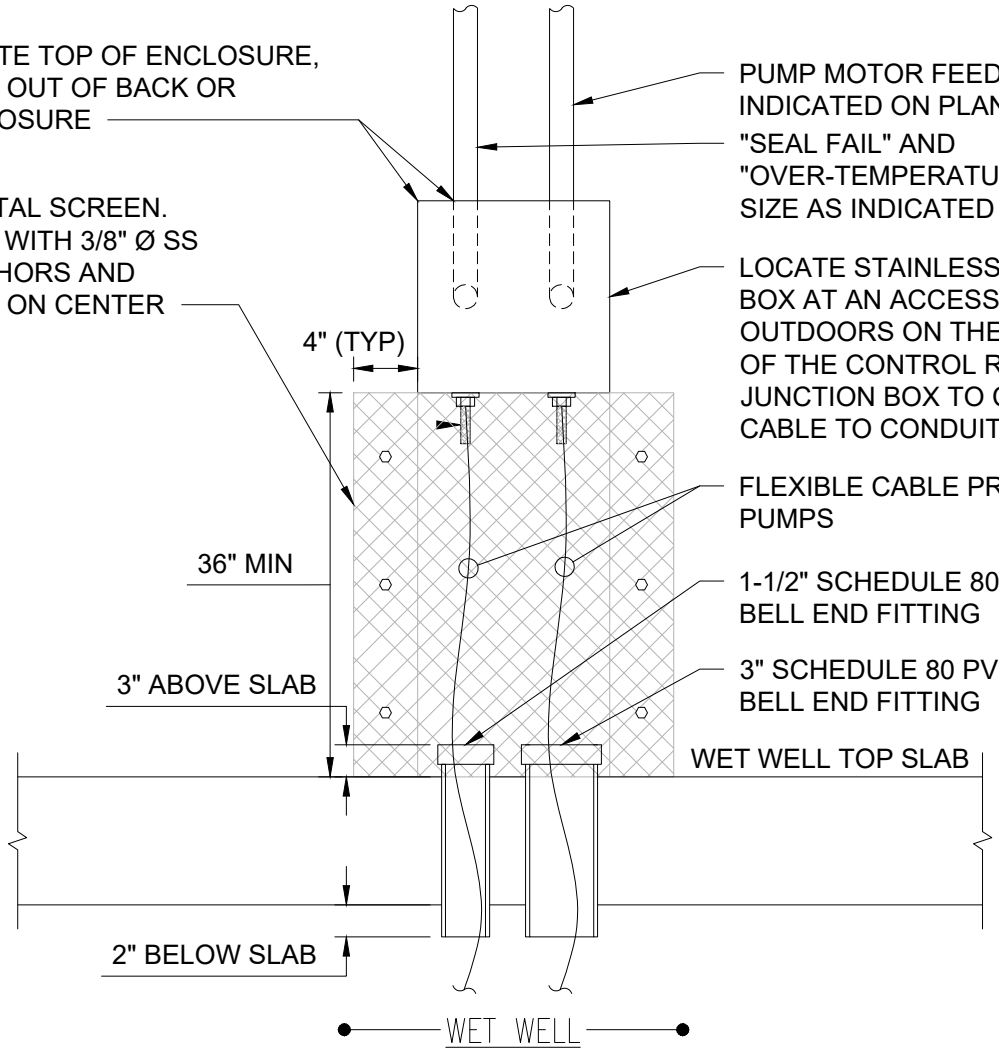

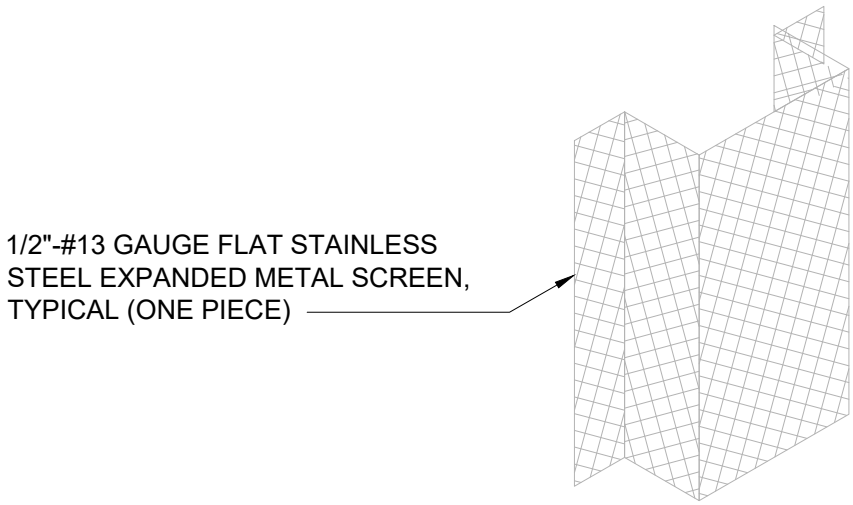

Public Utilities	CITY OF VIRGINIA BEACH - PUBLIC UTILITIES STANDARD DETAILS	SCALE: NOT TO SCALE
		DRAWING NO. PU 7.20
DATE: 10/2023	EXTERIOR JUNCTION BOX DETAIL - PUMP CABLING	SHEET NO. 1 OF 2

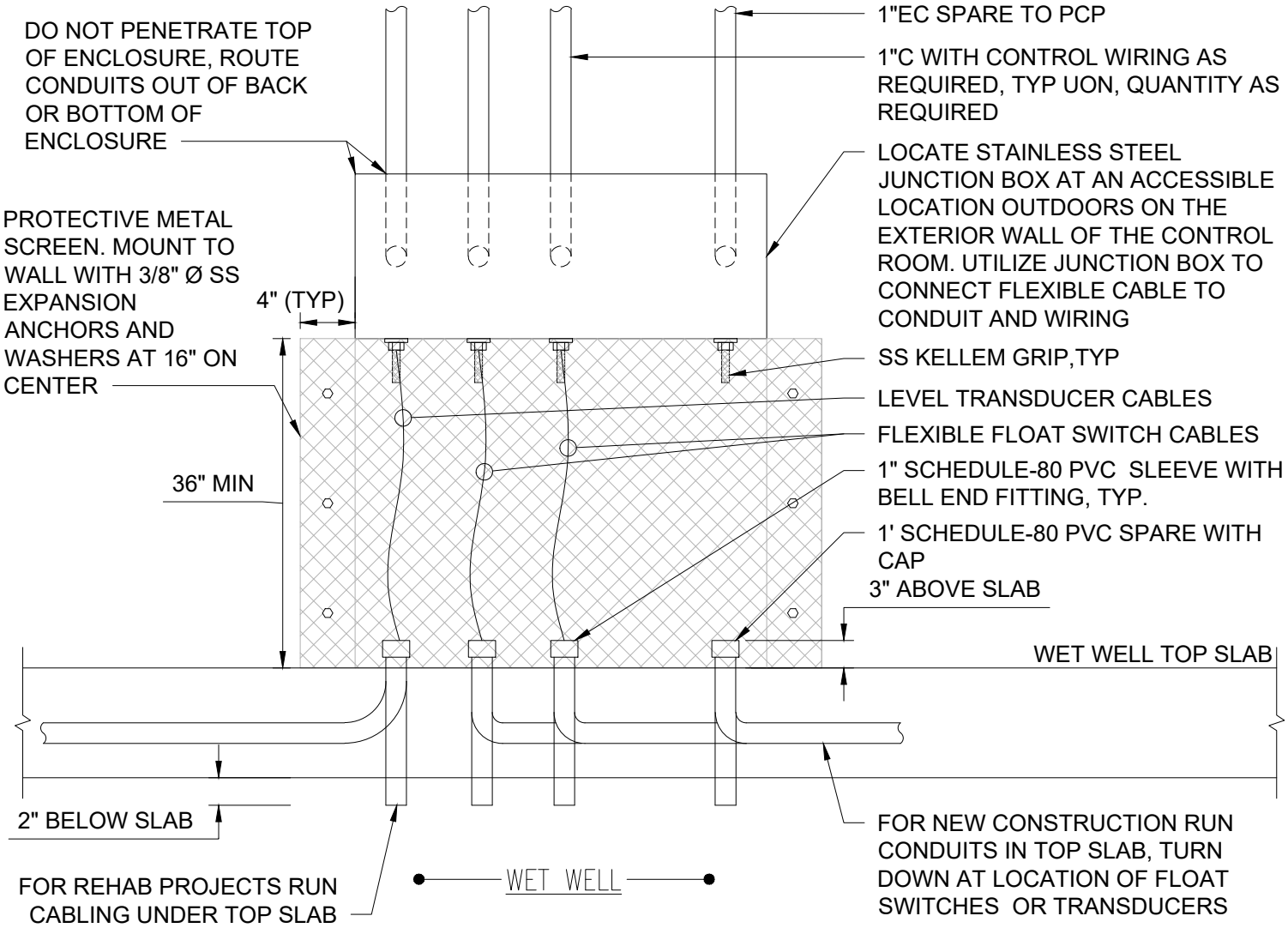

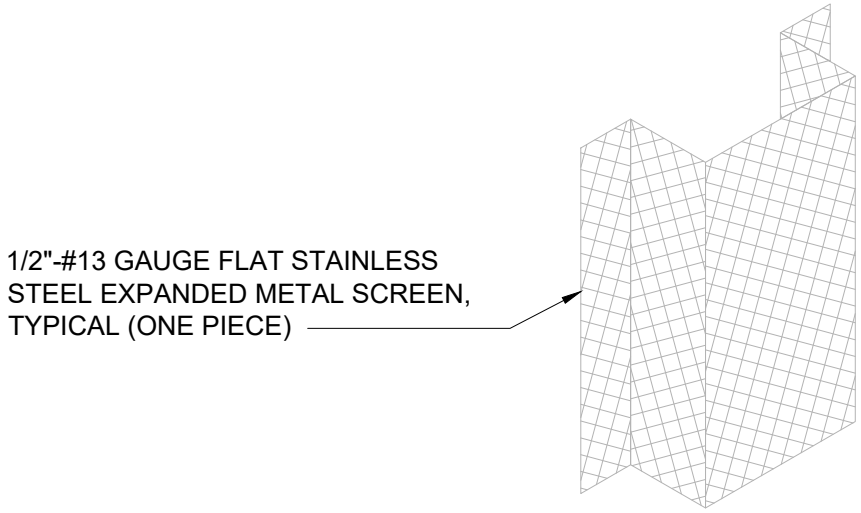

Public Utilities	CITY OF VIRGINIA BEACH - PUBLIC UTILITIES STANDARD DETAILS	SCALE: NOT TO SCALE
		DRAWING NO. PU 7.20
DATE: 10/2023	EXTERIOR JUNCTION BOX DETAIL - LEVEL SENSING CABLING	SHEET NO. 2 OF 2

NOTE:

1. 10"X14" PLASTIC OR DURA-PLASTIC SIGN SHALL BE POSTED ON WET WELL HATCHES.

Public Utilities	CITY OF VIRGINIA BEACH - PUBLIC UTILITIES STANDARD DETAILS	SCALE: NOT TO SCALE
		DRAWING NO. PU 7.21
DATE: 10/2023	CONFINED SPACE SIGN	SHEET NO. 1 OF 1

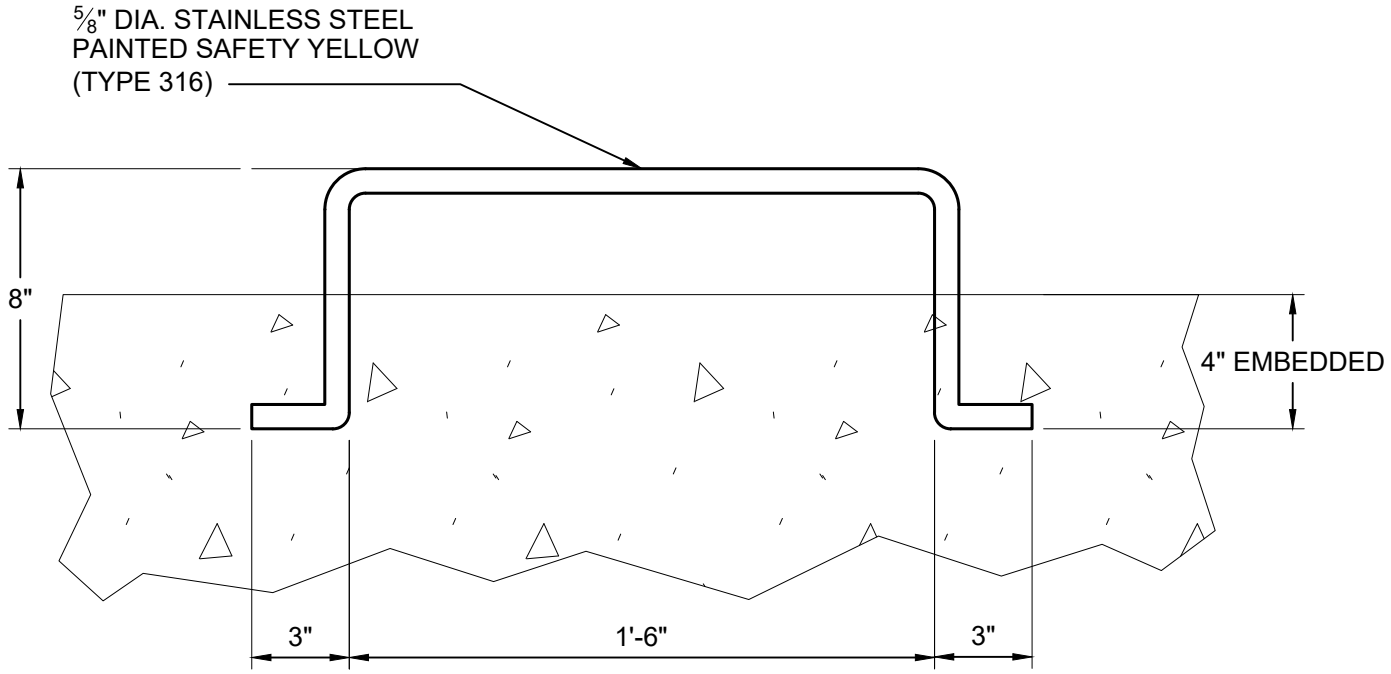

CAST IN PLACE

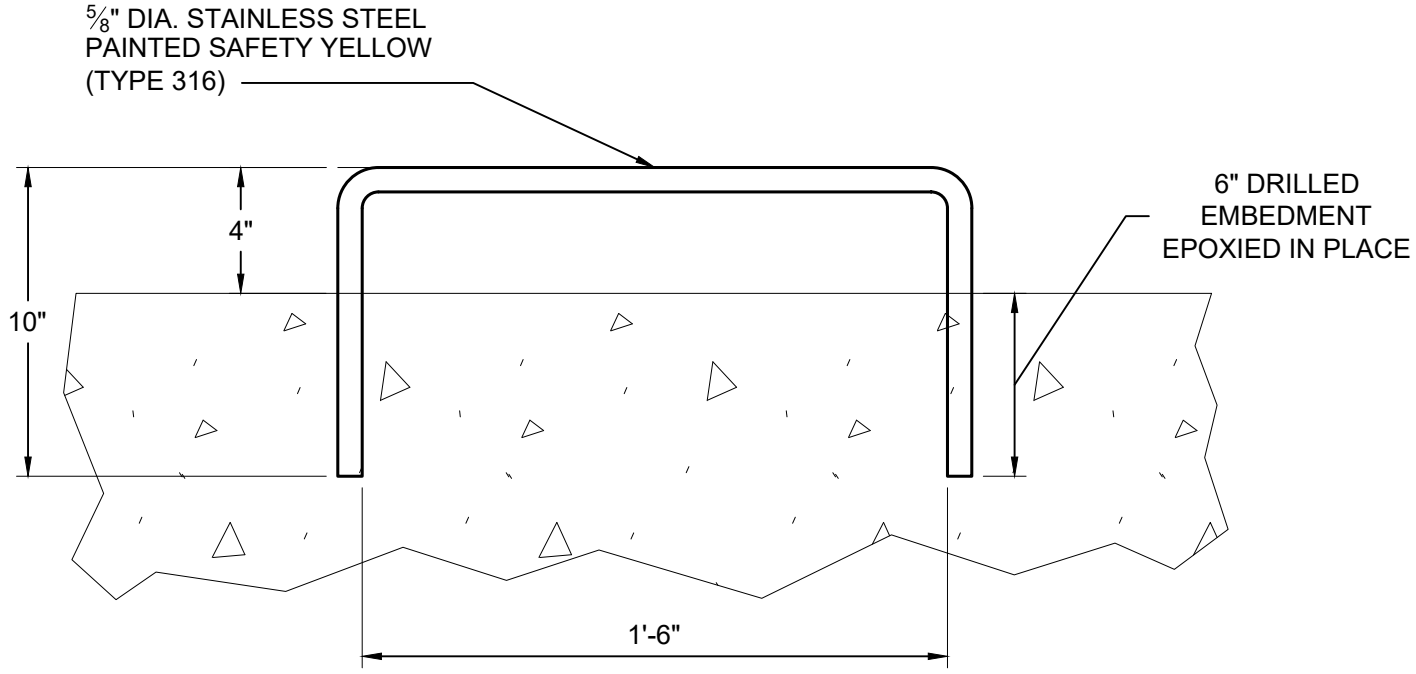

EXISTING CONSTRUCTION

Public Utilities	CITY OF VIRGINIA BEACH - PUBLIC UTILITIES STANDARD DETAILS	SCALE: NOT TO SCALE
		DRAWING NO. PU 7.22
DATE: 10/2023	GRAB BAR	SHEET NO. 1 OF 1

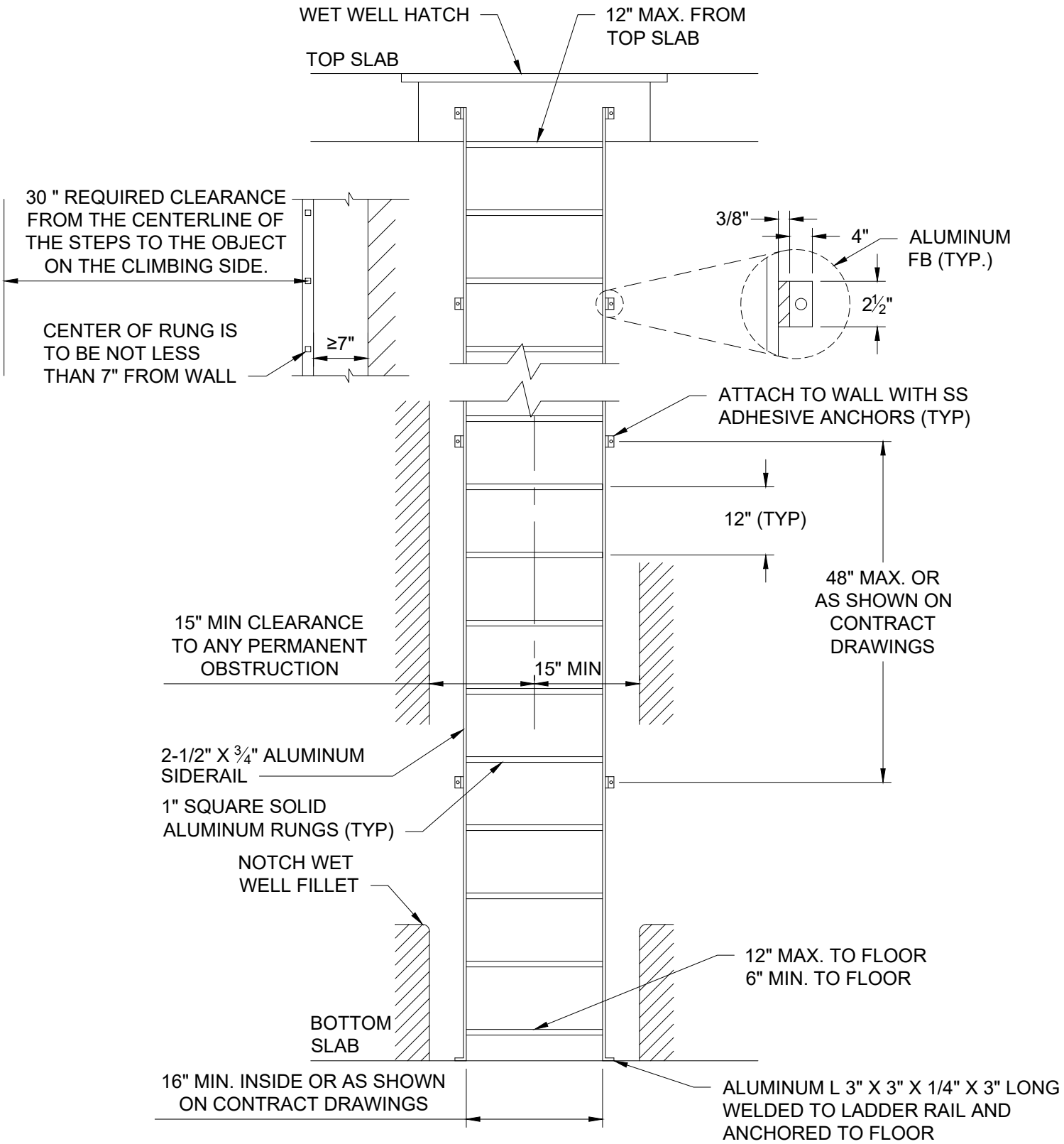

Public Utilities	CITY OF VIRGINIA BEACH - PUBLIC UTILITIES STANDARD DETAILS	SCALE: NOT TO SCALE
		DRAWING NO. PU 7.23
DATE: 10/2023	WET WELL LADDER	SHEET NO. 1 OF 1

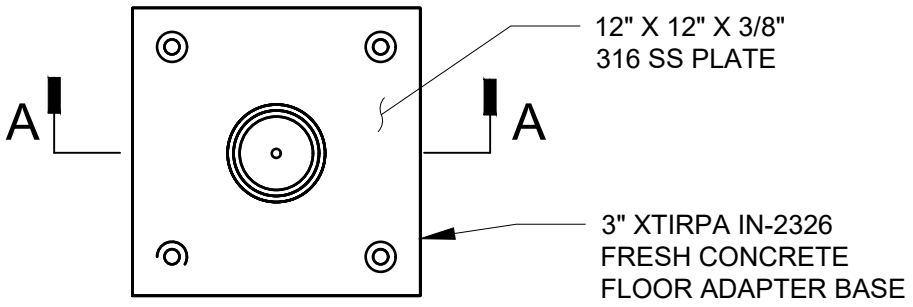

PLAN VIEW

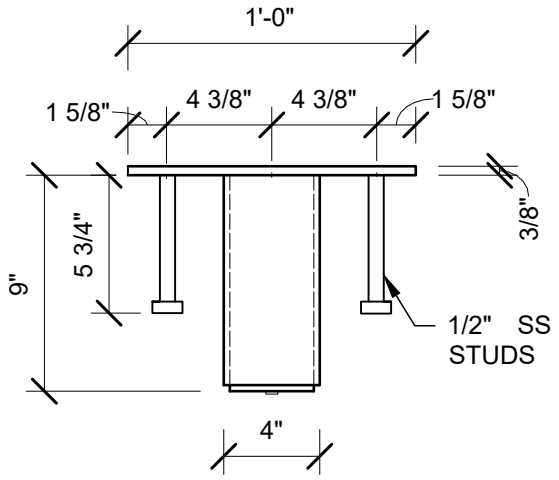

SIDE VIEW

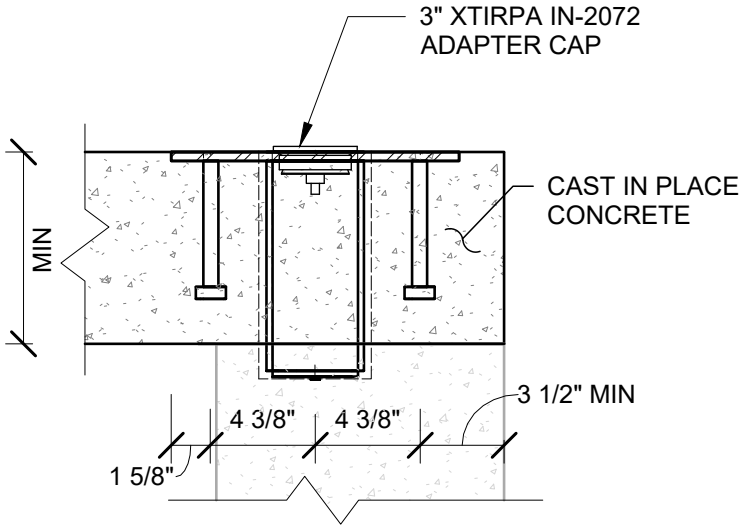

SECTION A-A
AT CAST IN PLACE CONCRETE
INSTALLATION

Public Utilities	CITY OF VIRGINIA BEACH - PUBLIC UTILITIES STANDARD DETAILS	SCALE: NOT TO SCALE
		DRAWING NO. PU 7.24
DATE: 10/2023	3 INCH FLUSH FLOOR ADAPTER - NEW CONSTRUCTION	SHEET NO. 1 OF 3

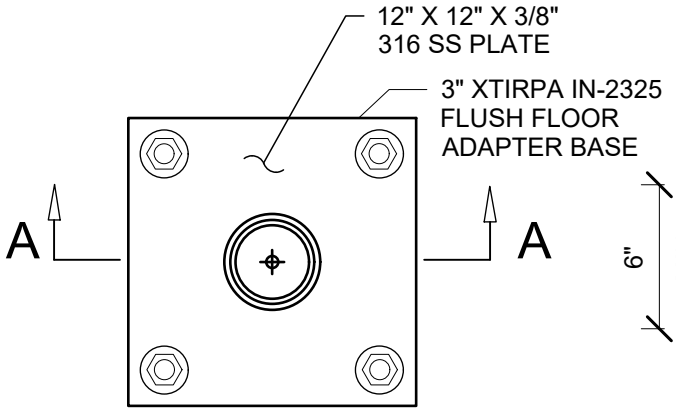

PLAN VIEW

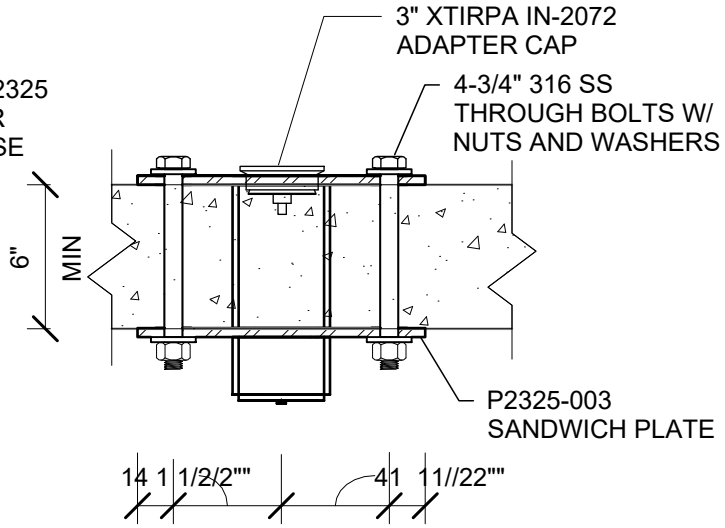

SECTION A-A
AT SANDWICH
INSTALLATION

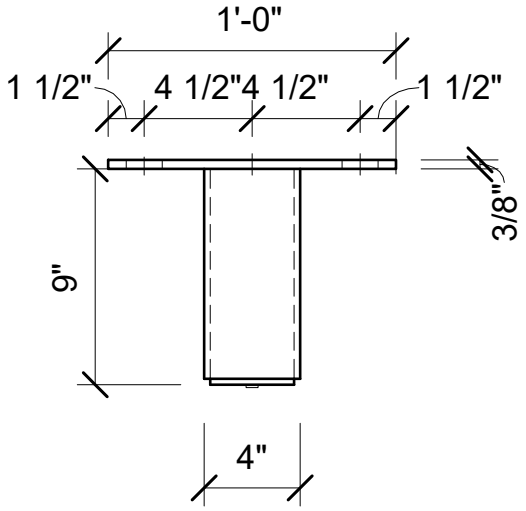

SIDE VIEW

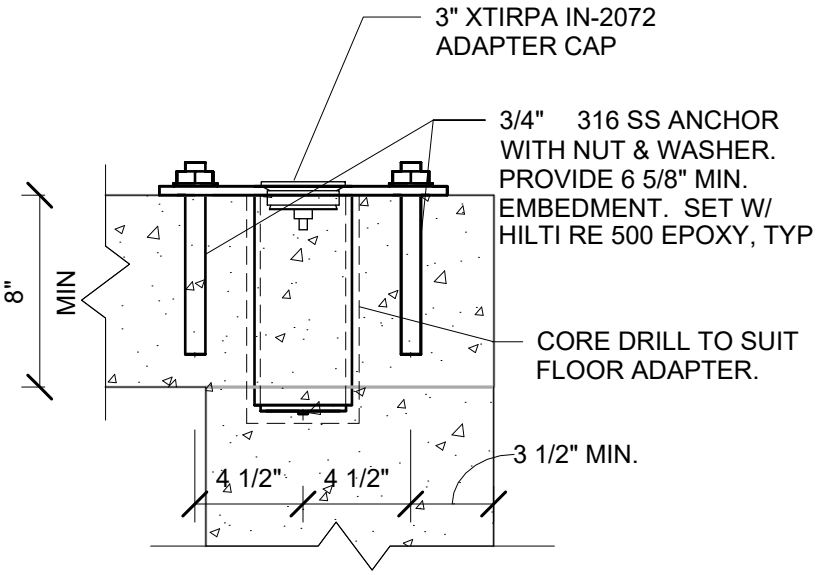

SECTION A-A
AT FULL THICKNESS
INSTALLATION

Public Utilities DATE: 10/2023	CITY OF VIRGINIA BEACH - PUBLIC UTILITIES STANDARD DETAILS	SCALE: NOT TO SCALE
	3 INCH FLUSH FLOOR ADAPTER - EXISTING CONSTRUCTION	DRAWING NO. PU 7.24
		SHEET NO. 2 OF 3

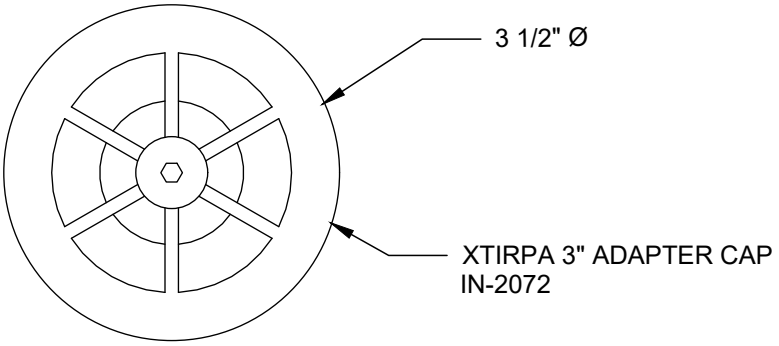

CAP PLAN VIEW

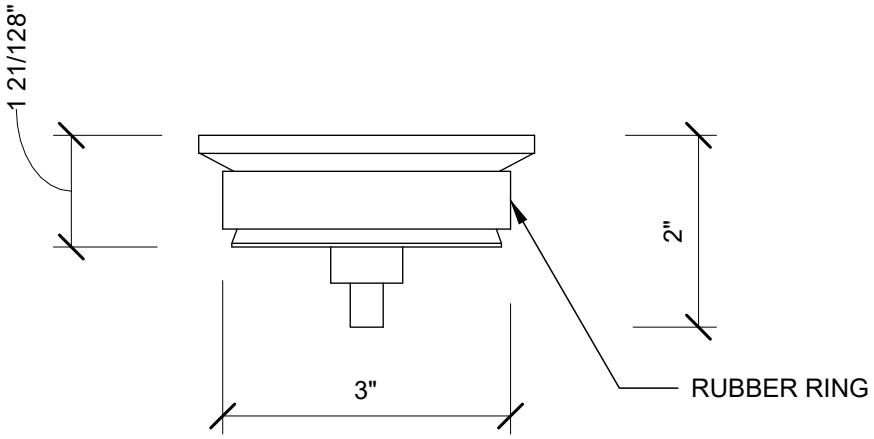

CAP SIDE VIEW

Public Utilities DATE: 10/2023	CITY OF VIRGINIA BEACH - PUBLIC UTILITIES STANDARD DETAILS	SCALE: NOT TO SCALE
	3 INCH FLUSH FLOOR ADAPTER - COVER	DRAWING NO. PU 7.24
		SHEET NO. 3 OF 3

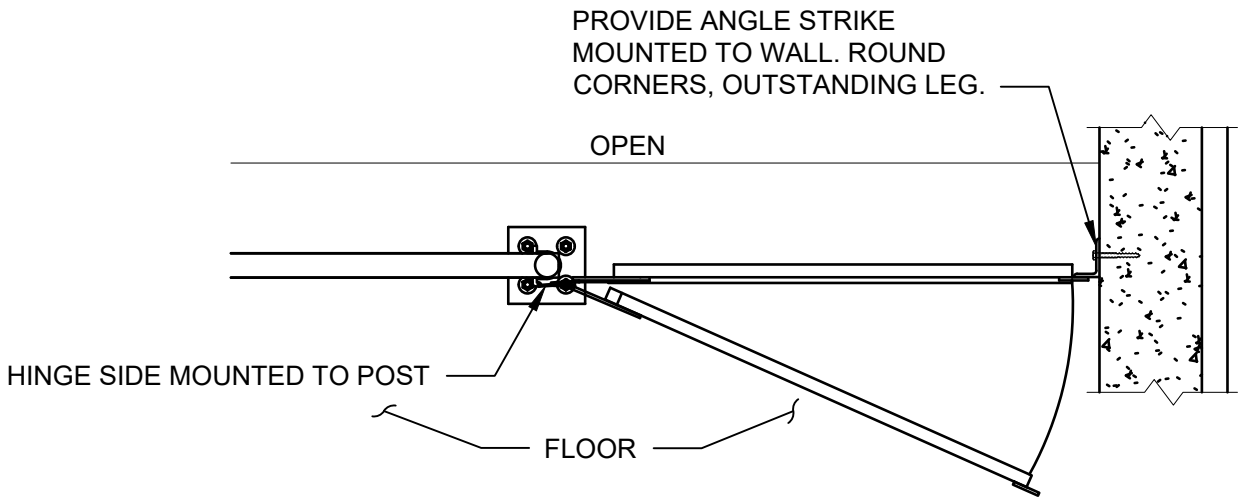

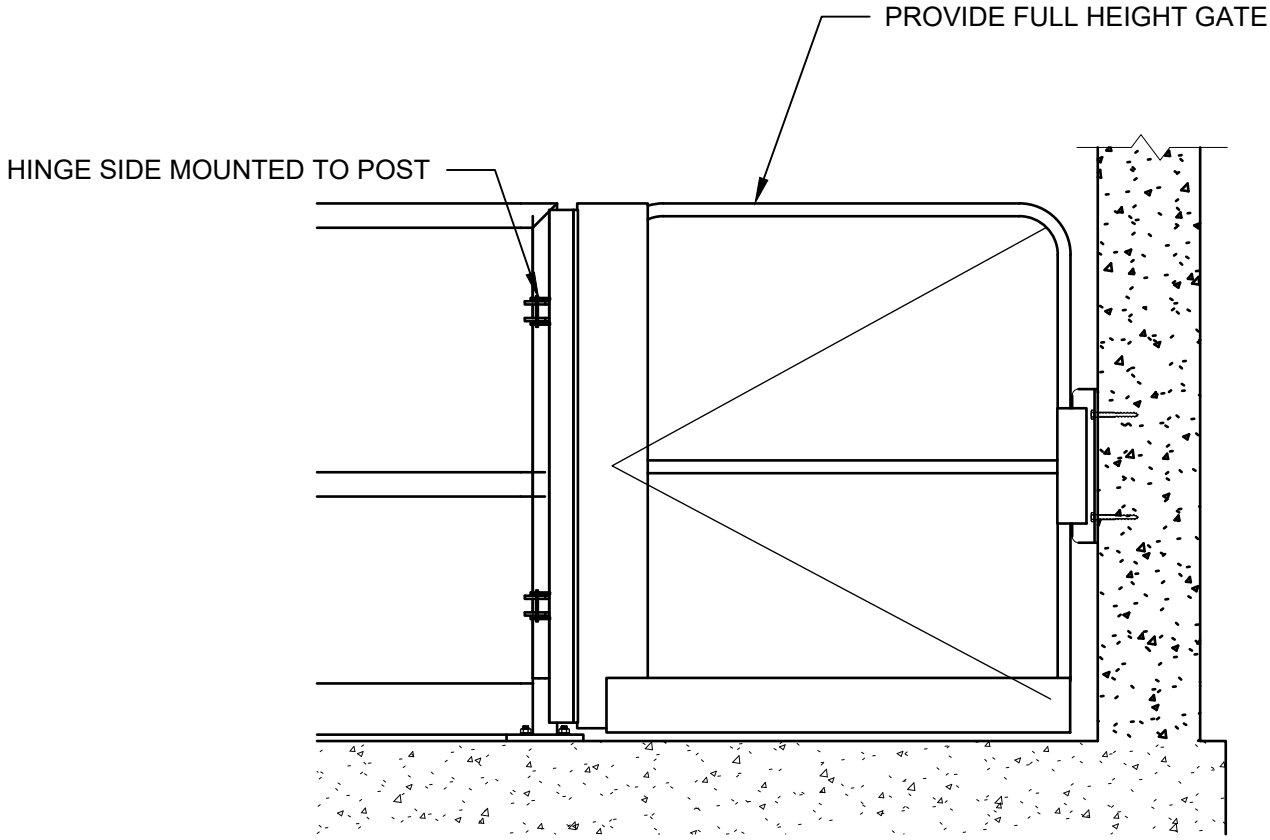

NOTE:

1. THE SELF-CLOSING GATE'S MATERIAL SHALL BE ALUMINUM.

Public Utilities	CITY OF VIRGINIA BEACH - PUBLIC UTILITIES STANDARD DETAILS	SCALE: NOT TO SCALE
		DRAWING NO. PU 7.25
DATE: 10/2023	SELF-CLOSING GATE	SHEET NO. 1 OF 1

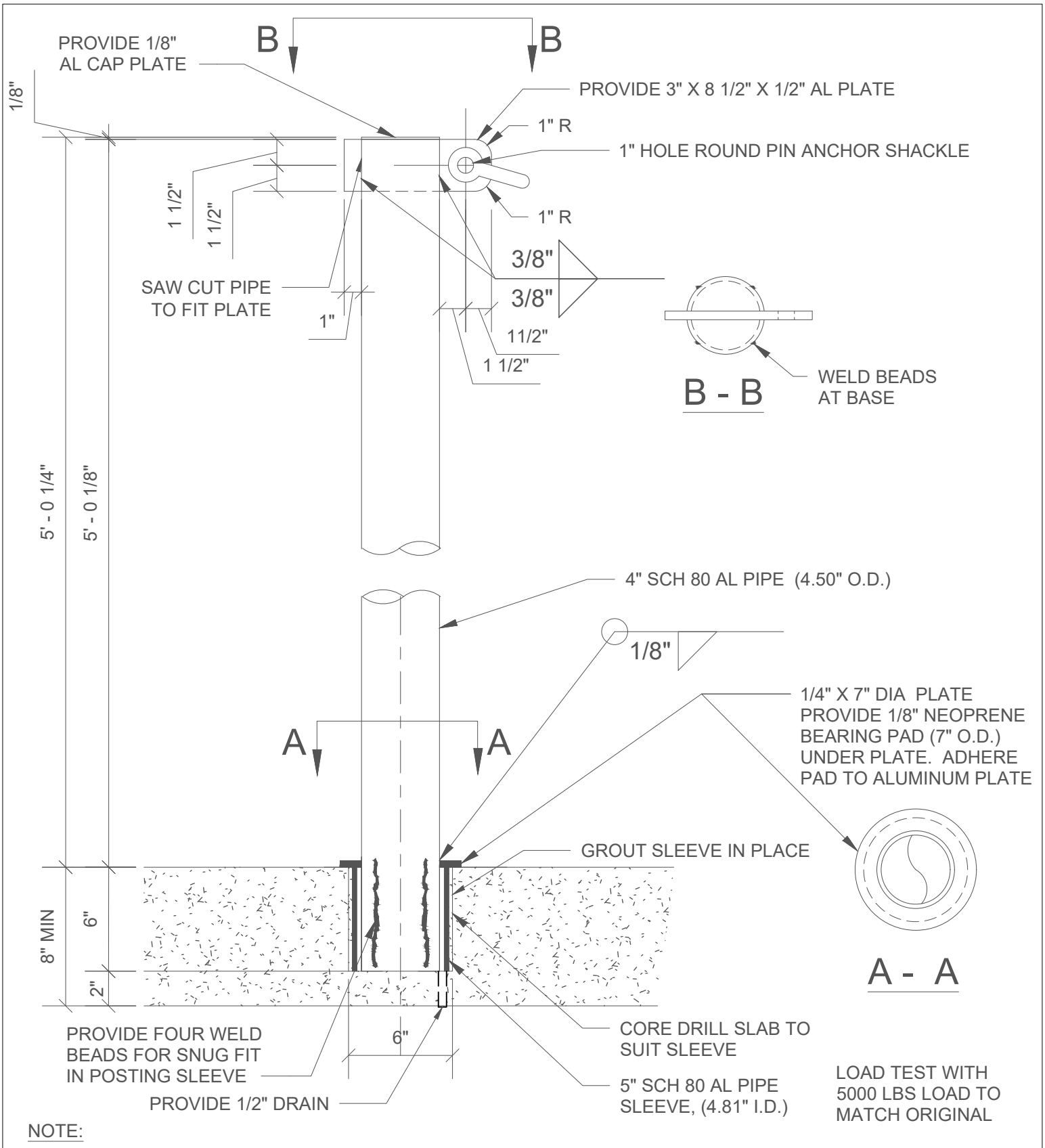

NOTE:

1. PROOF TEST ANCHOR POINTS WITH 5000 POUND LOAD. LOAD TEST WITH REACTION BEAM IN ADJACENT OPENING. PROVIDE WRITTEN DOCUMENTATION OF LOAD TEST TO OWNER.

VB Public Utilities	CITY OF VIRGINIA BEACH - PUBLIC UTILITIES STANDARD DETAILS	SCALE: NOT TO SCALE
		DRAWING NO. PU 7.26
	REMOVABLE ANCHOR POST	SHEET NO. 1 OF 3
DATE: 10/2023		

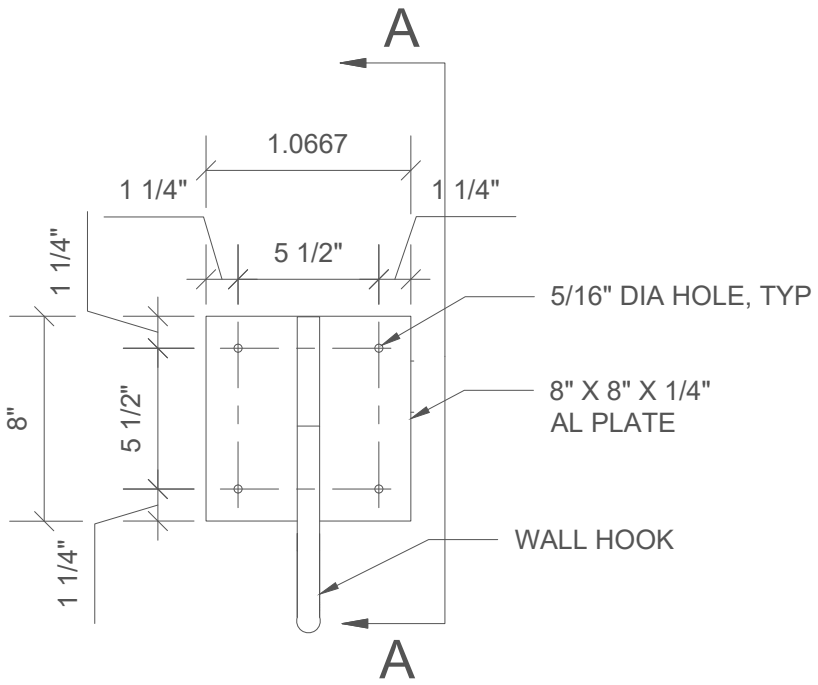

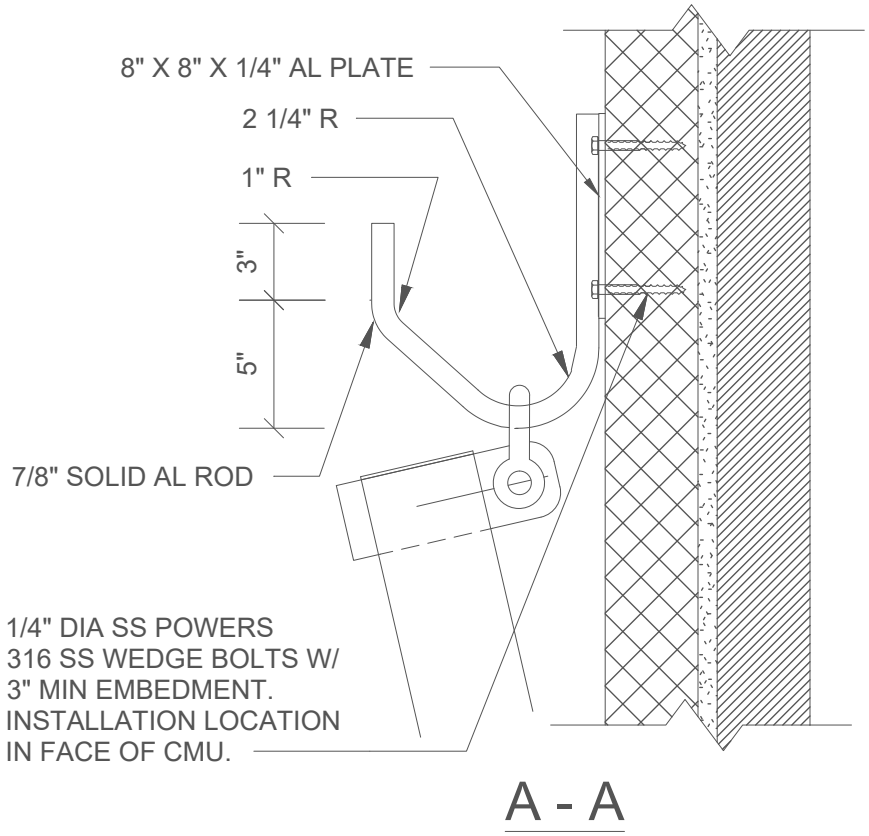

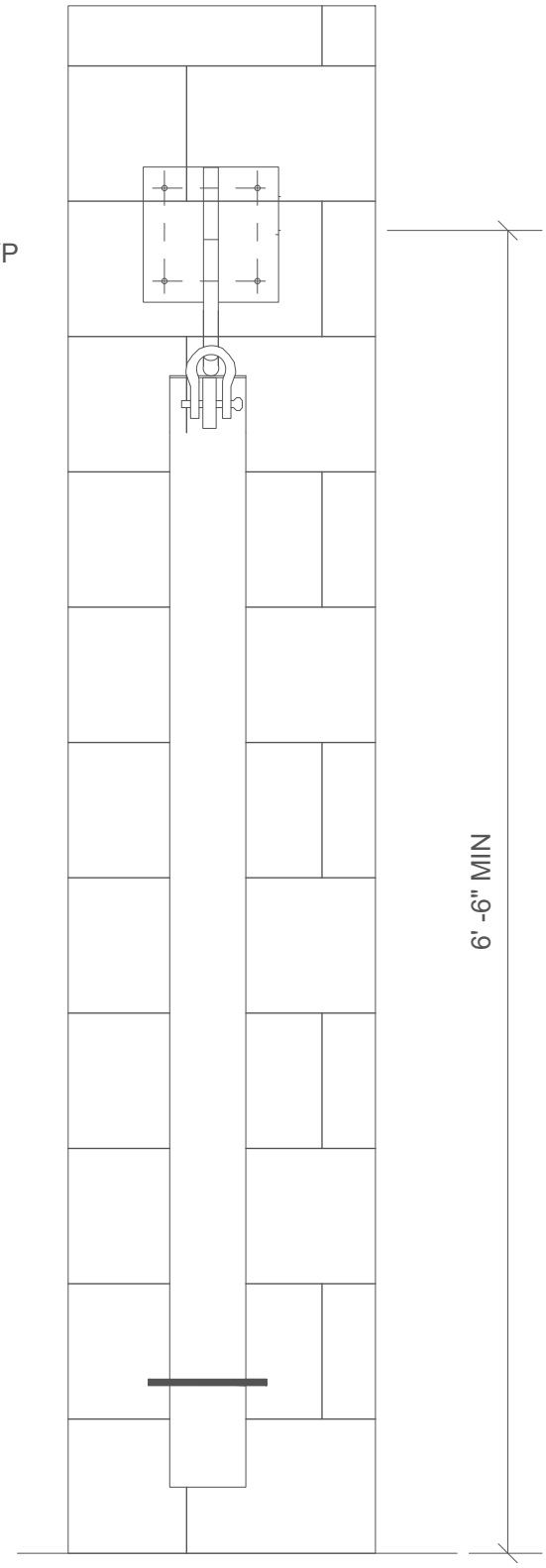

NOTE:

1. COORDINATE LOCATION OF STORAGE HOOD WITH OWNER.

Public Utilities	CITY OF VIRGINIA BEACH - PUBLIC UTILITIES STANDARD DETAILS	SCALE: NOT TO SCALE
		DRAWING NO. PU 7.26
DATE: 10/2023	REMOVABLE ANCHOR POST - STORAGE HOOK	SHEET NO. 2 OF 3

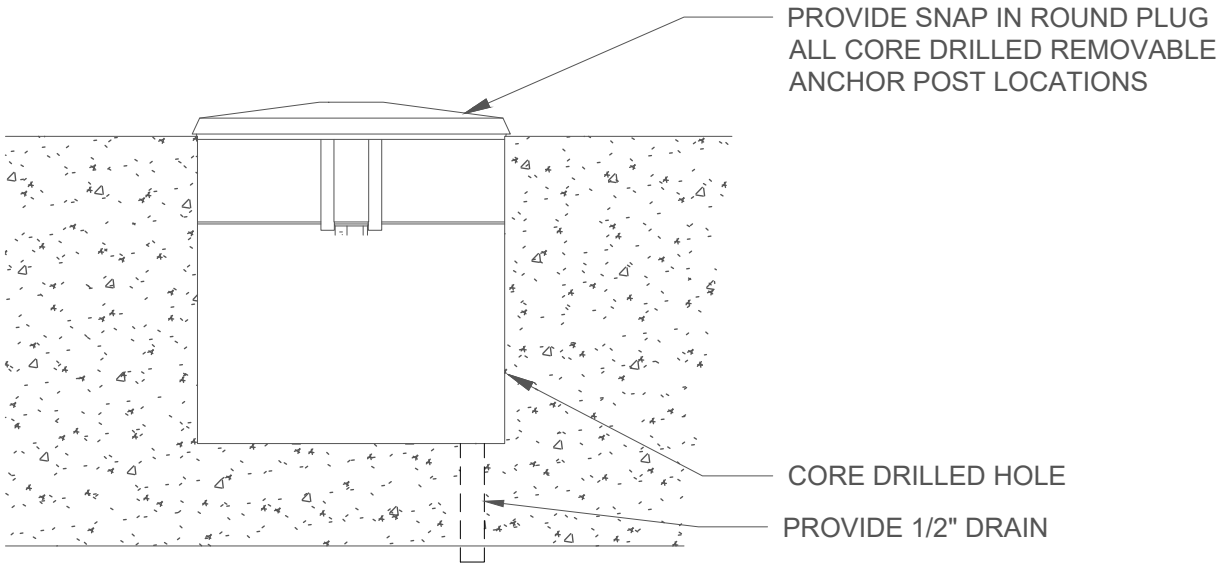

Public Utilities DATE: 10/2023	CITY OF VIRGINIA BEACH - PUBLIC UTILITIES STANDARD DETAILS	SCALE: NOT TO SCALE
	REMOVABLE ANCHOR POST - COVER	DRAWING NO. PU 7.26
		SHEET NO. 3 OF 3

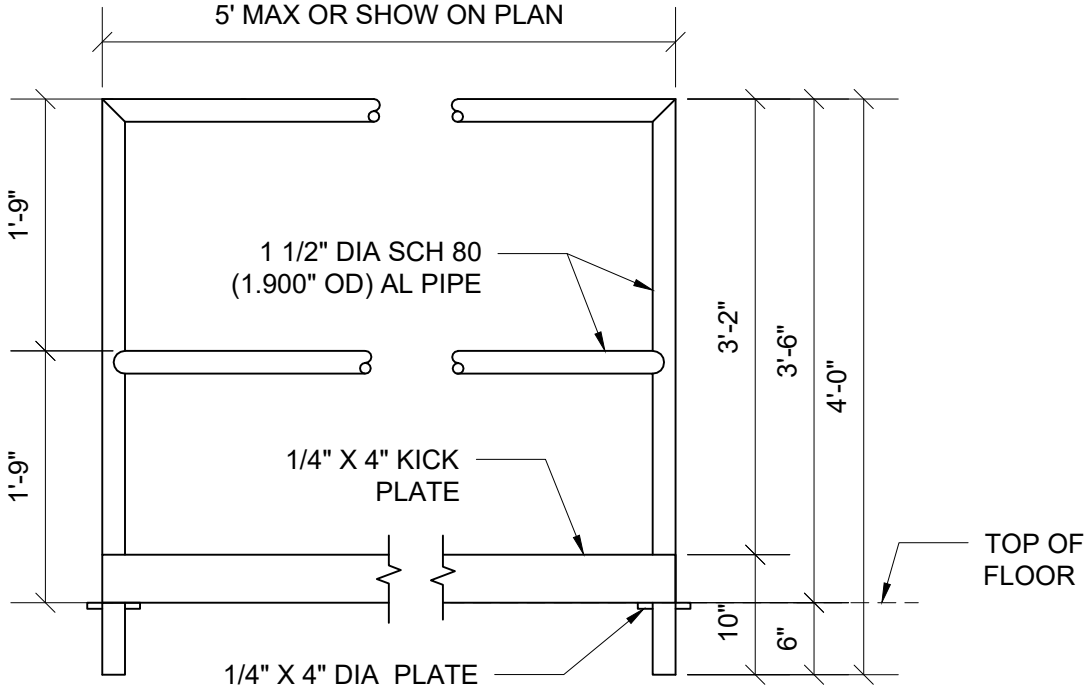

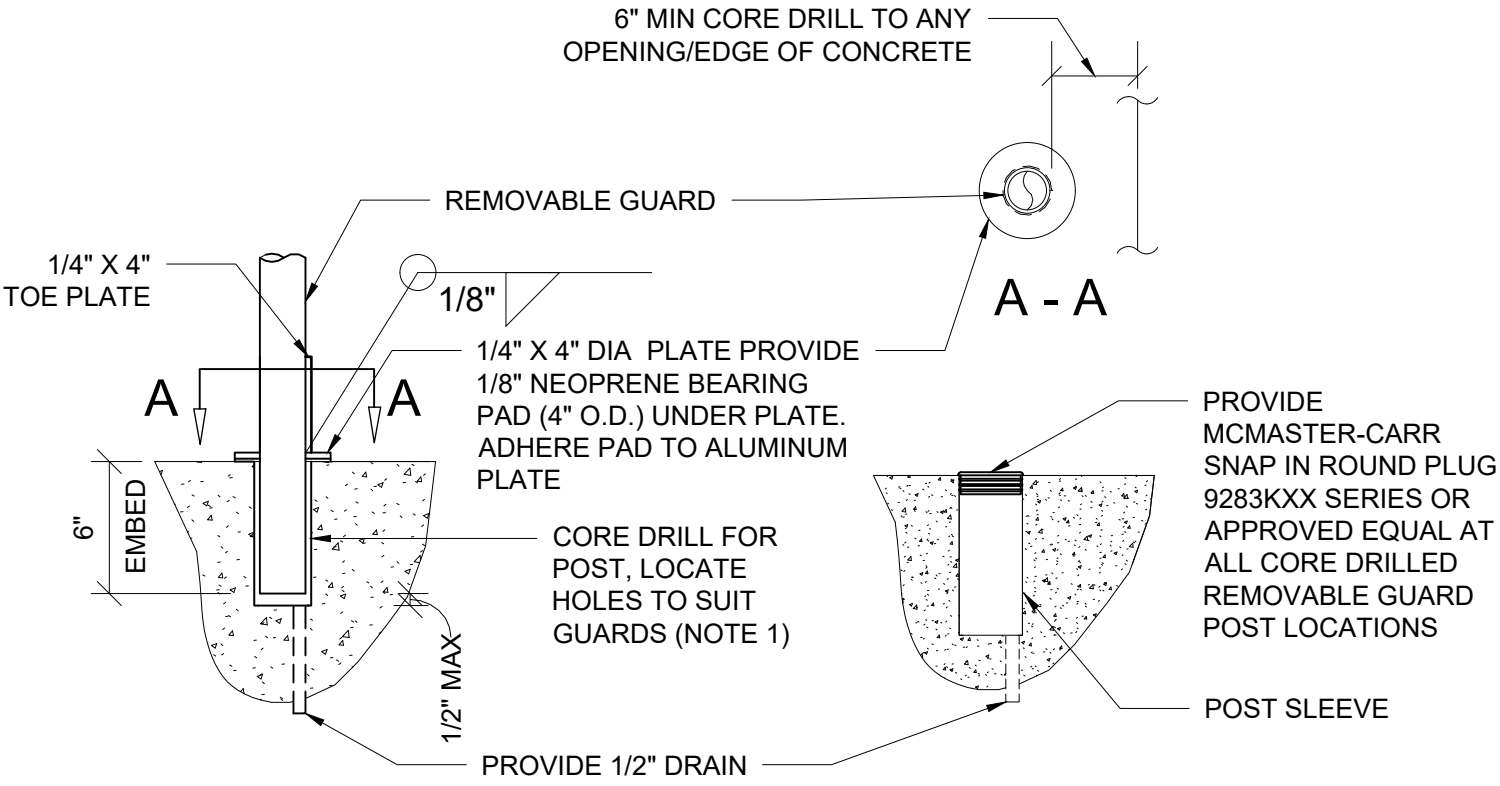

NOTE:

1. HOLES OR PIPE SLEEVES MAY BE CAST IN NEW CONSTRUCTION

Public Utilities	CITY OF VIRGINIA BEACH - PUBLIC UTILITIES STANDARD DETAILS	SCALE: NOT TO SCALE
		DRAWING NO. PU 7.27
DATE: 10/2023	GUARD - REMOVABLE	SHEET NO. 1 OF 3

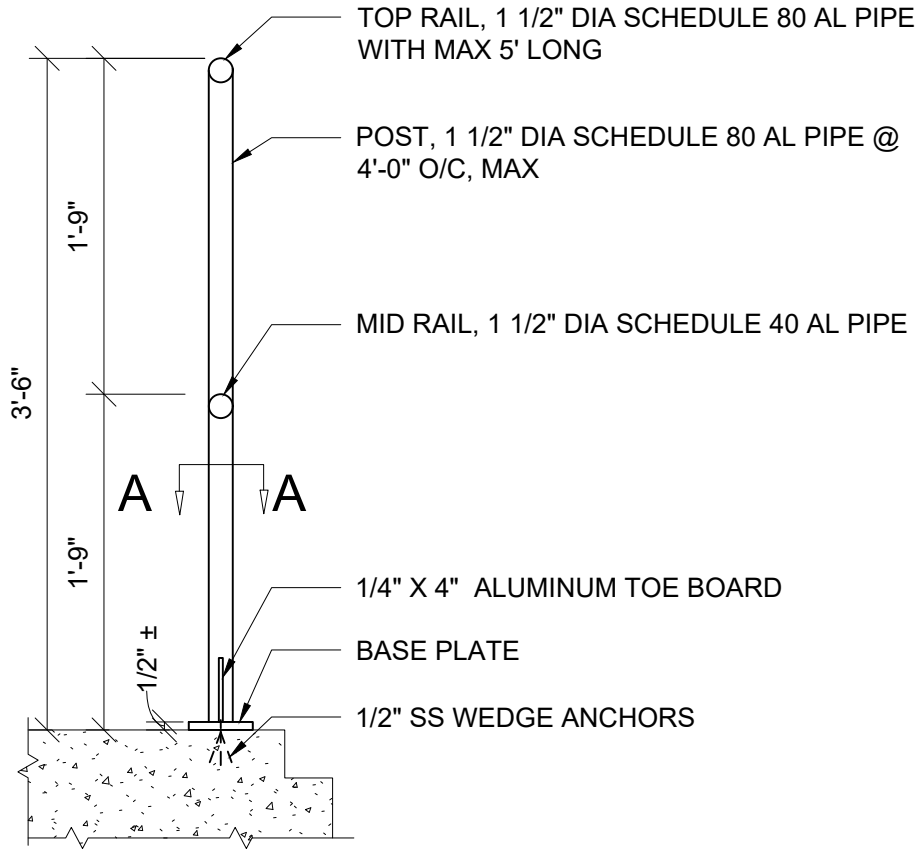

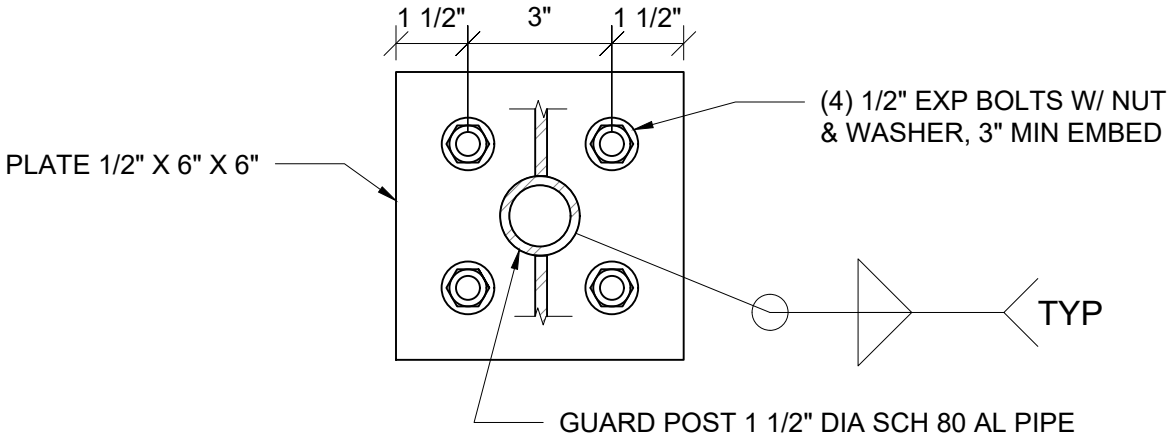

A - A

Public Utilities	CITY OF VIRGINIA BEACH - PUBLIC UTILITIES STANDARD DETAILS	SCALE: NOT TO SCALE
		DRAWING NO. PU 7.27
DATE: 10/2023	GUARD - FIXED	SHEET NO. 2 OF 3

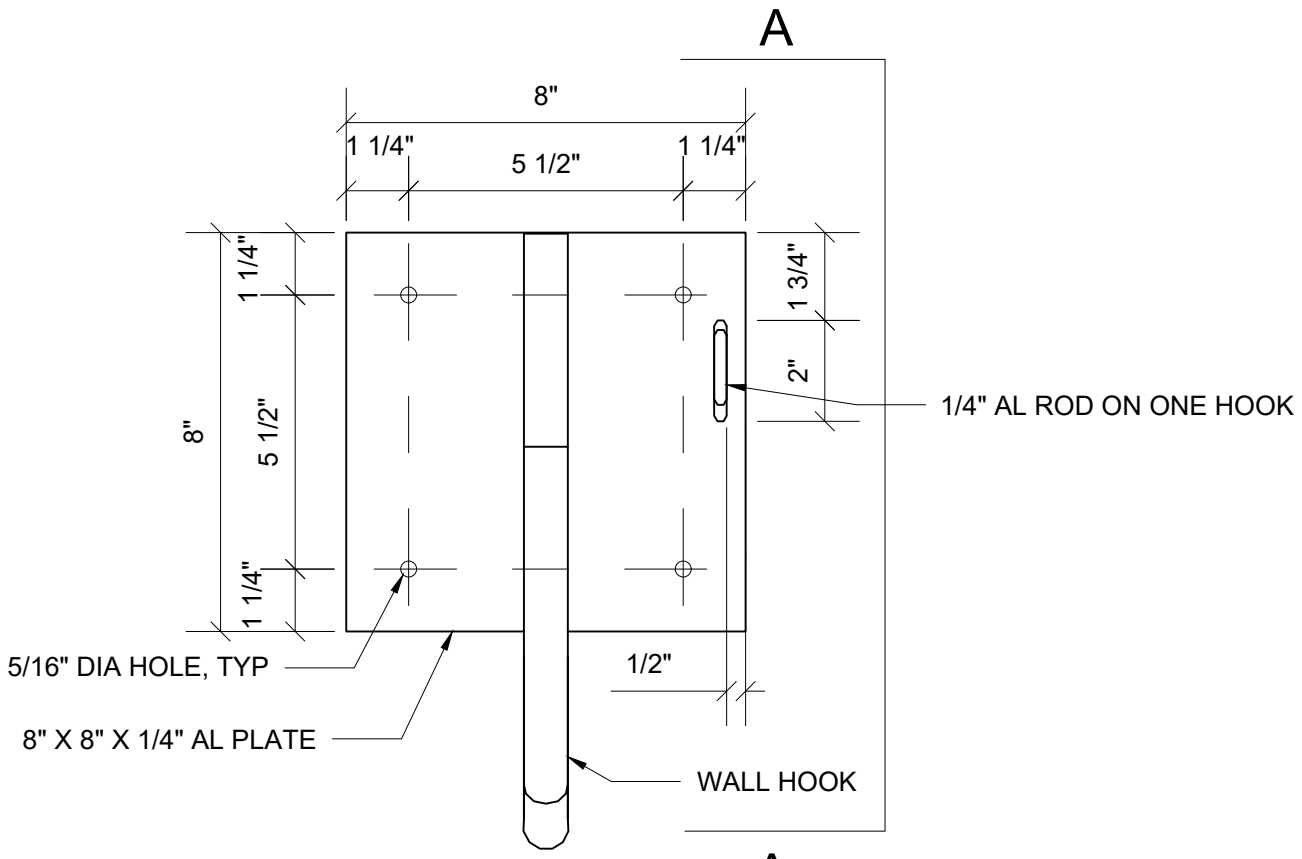

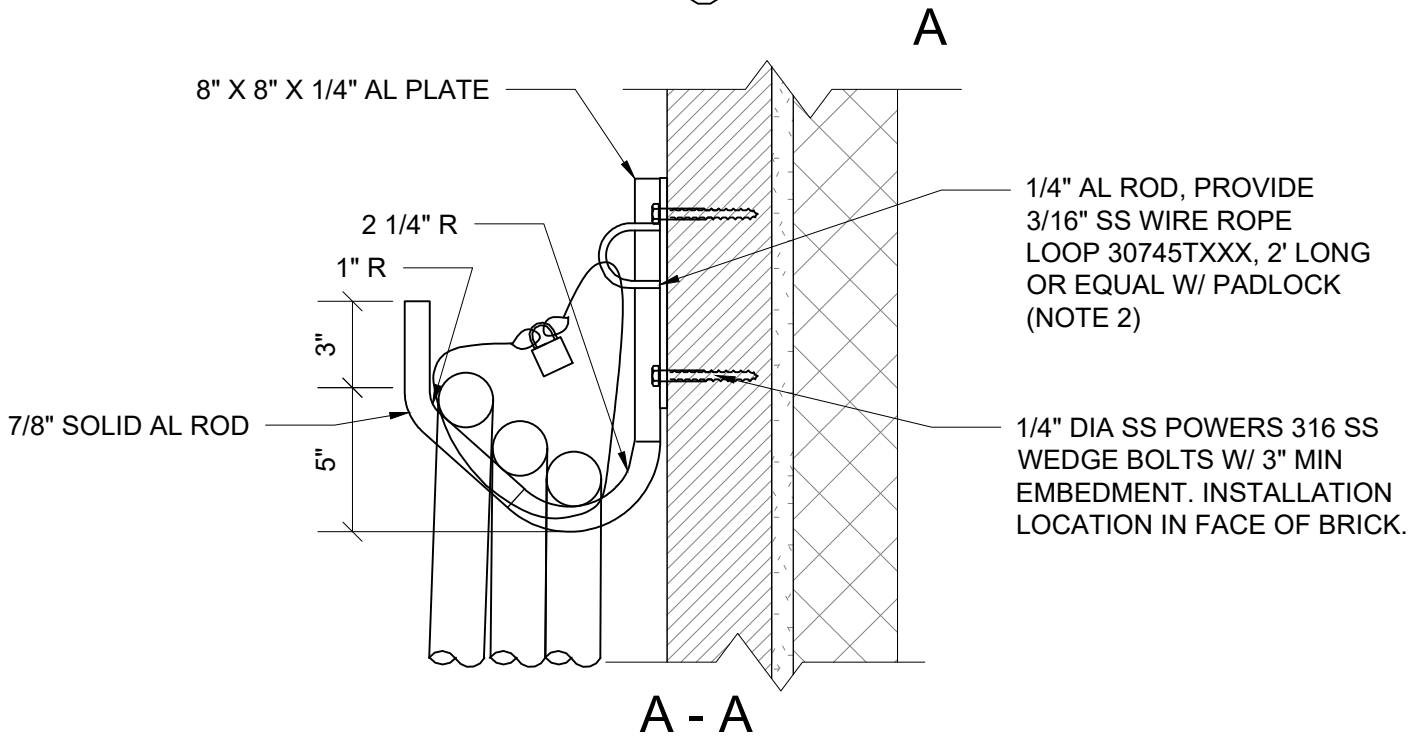

NOTE:

2. OMIT AL ROD AND SS WIRE ROPE LOOP FOR INTERIOR INSTALLATION.

3. COORDINATE LOCATE OF THE HOOK WITH THE OWNER.

VB Public Utilities	CITY OF VIRGINIA BEACH - PUBLIC UTILITIES STANDARD DETAILS	SCALE: NOT TO SCALE
		DRAWING NO. PU 7.27
DATE: 10/2023	STORAGE HOOKS FOR GUARD REMOVABLE	SHEET NO. 3 OF 3

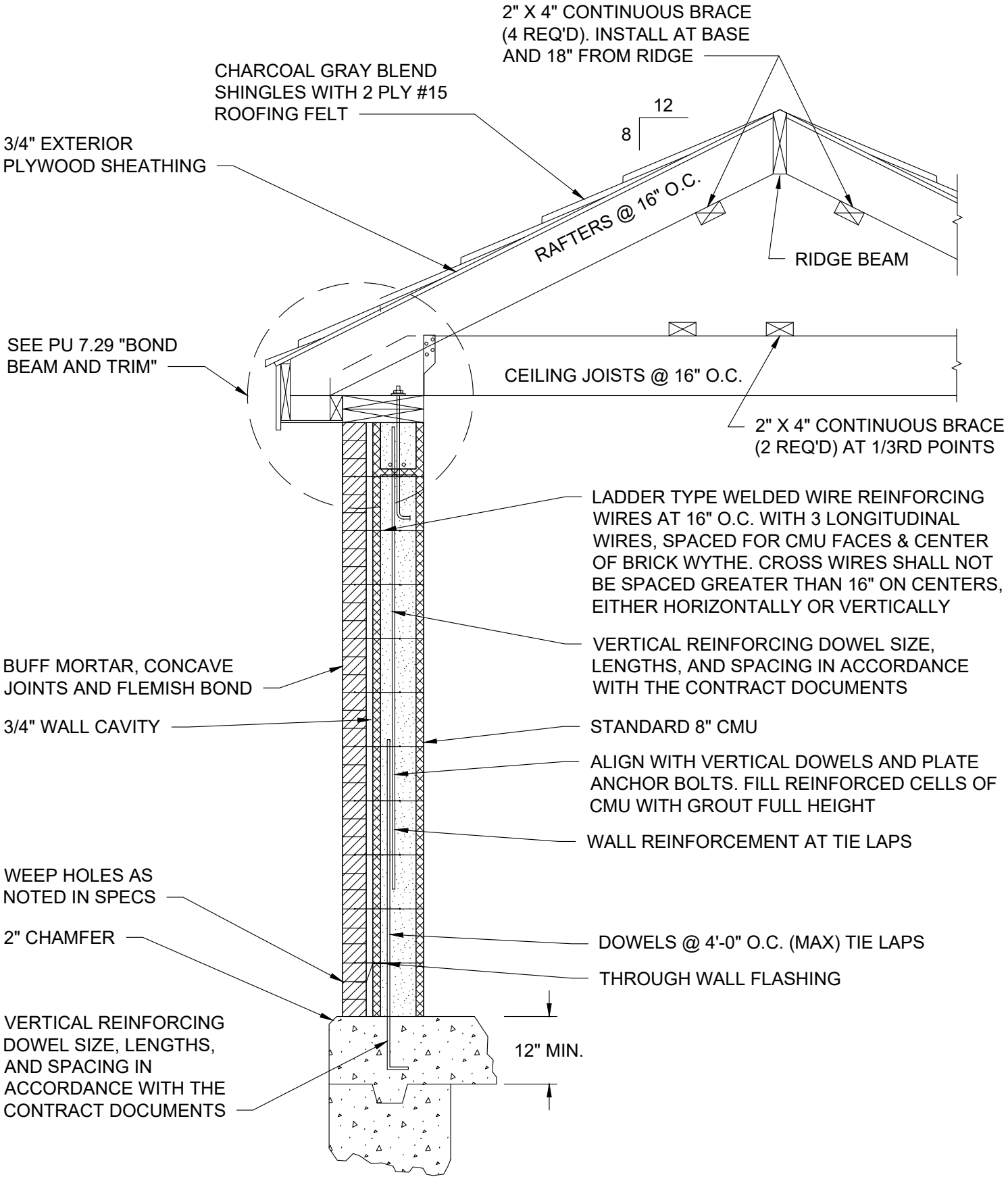

Public Utilities	CITY OF VIRGINIA BEACH - PUBLIC UTILITIES STANDARD DETAILS	SCALE: NOT TO SCALE
		DRAWING NO. PU 7.28
DATE: 10/2023	WALL SECTION	SHEET NO. 1 OF 1

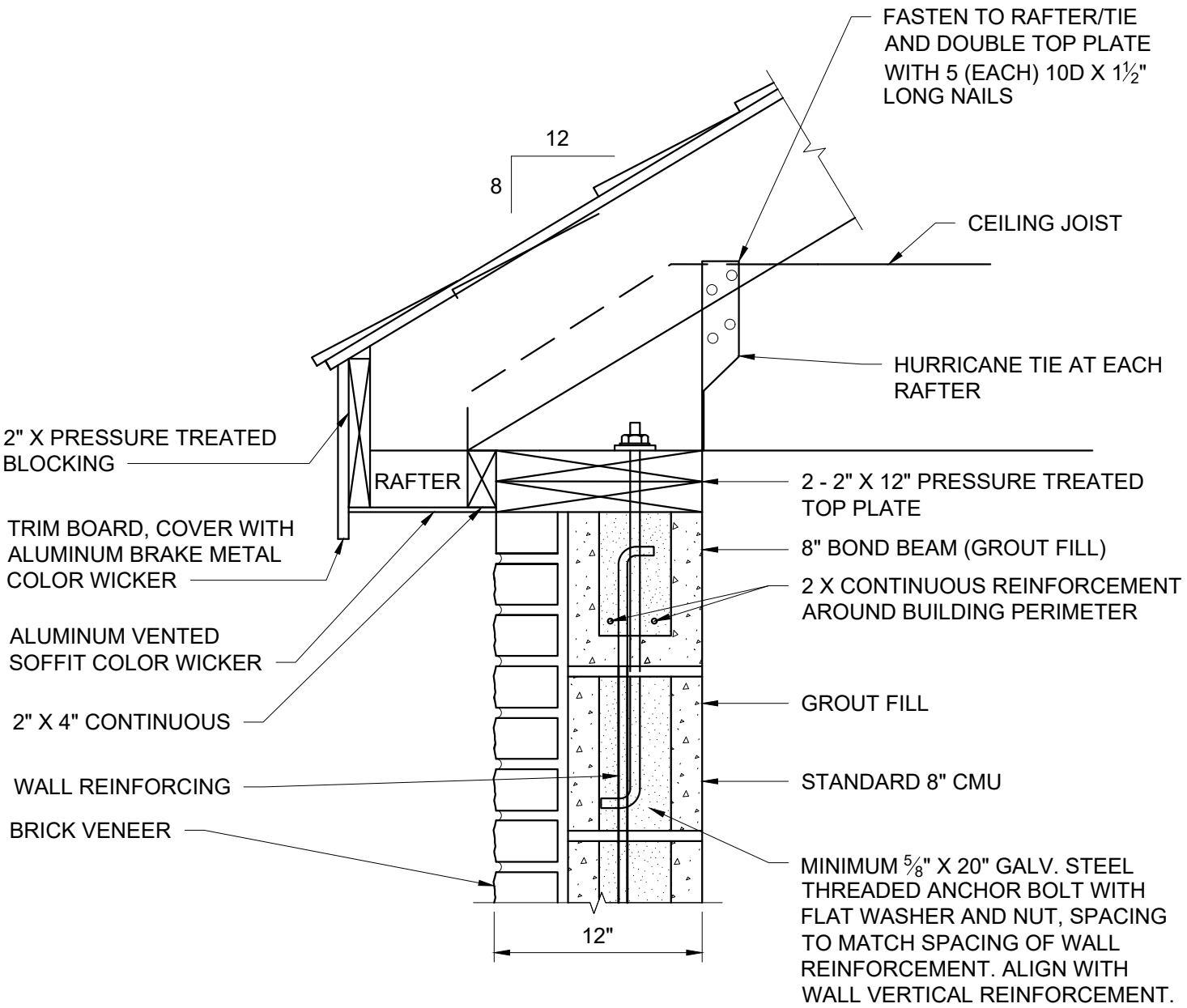

Public Utilities	CITY OF VIRGINIA BEACH - PUBLIC UTILITIES STANDARD DETAILS	SCALE: NOT TO SCALE
		DRAWING NO. PU 7.29
DATE: 10/2023	BOND BEAM AND TRIM	SHEET NO. 1 OF 1

CONDUIT AND CONDUCTOR STANDARD					
	QTY	SIZE AWG	COLOR	CONDUIT SIZE	LOCATION
1	2	2	BLUE	1/2"	DOOR - RTU
2	14	14	6-BLUE/8-RED	1"	PCP - RTU
3	3	3	PAIR SHEILD	1"	PCP - RTU
4	8	8	BLUE	3/4"	RTU - XFER SW
5	8	8	2-BLUE/4-RED/2-WHITE	3/4"	PCP - STARTER (EA)
6	4	4	RED	3/4"	GENSET - XFER SW
7	8	8	BLUE	3/4"	GENSET - RTU
8	2	2	BLACK/RED	3/4"	RTU - BATTERY BOX
9	2	2	RED	3/4"	GENSET - E STOP BUTTON
10	4	4	RED (LABELED)	3/4"	PCP - DW LOCK OUT SW (2 SW 1 BOX)
11	4	4	2-RED/2-BLUE	3/4"	PCP - SEPARATE PHASE MTR ENCLOSURE

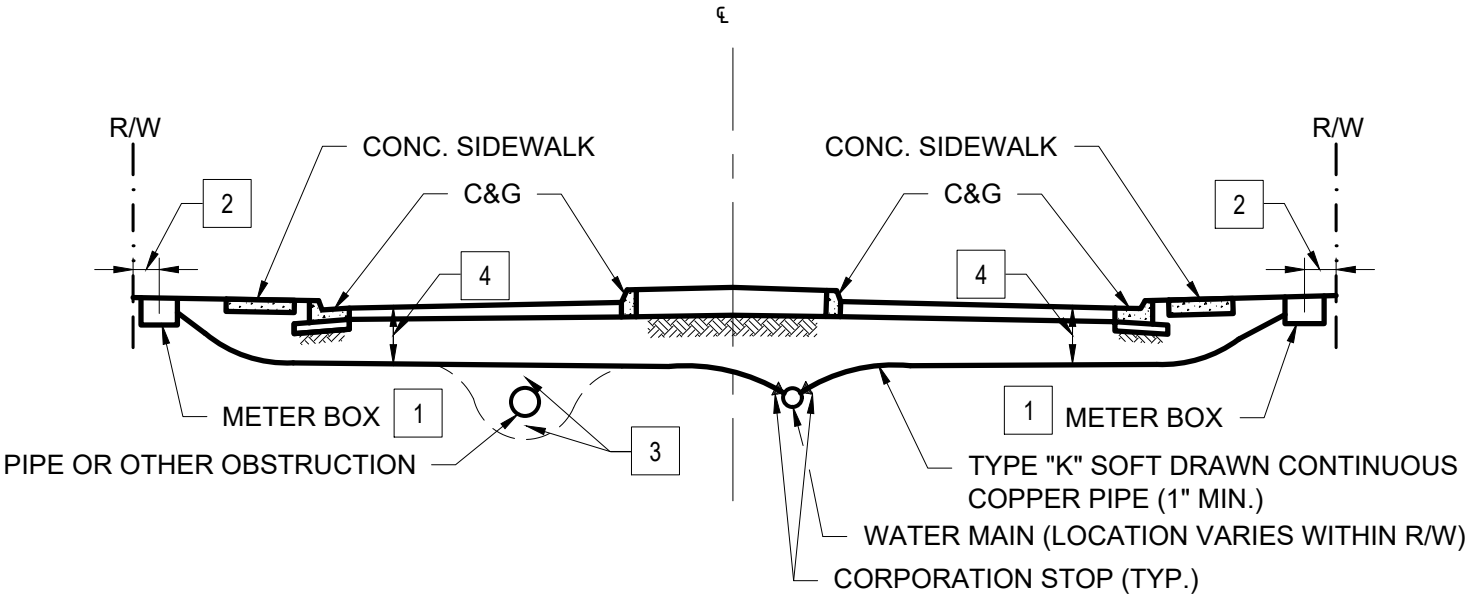

1 SEE PU 8.2 "5/8" AND 1" WATER METER BOX SETTING"

2 SEE PLAN FOR LOCATION

3 GO OVER OBSTRUCTION IF MINIMUM COVER IS AVAILABLE. GO UNDER OBSTRUCTION IF MINIMUM COVER IS NOT AVAILABLE. 12" MIN. CLEARANCE REQUIRED FROM STORM DRAIN OR PRIVATE UTILITY. 18" MIN. CLEARANCE FROM SANITARY SEWER.

4 MINIMUM COVER IN RIGHT OF WAY SHALL BE 18"

5 A 1" SERVICE LINE MAY BE DIRECT TAPPED AT 45 DEGREES TO TOP OF MAIN. ALL OTHER SERVICE SIZES REQUIRE A SADDLE.

NOTES:

6. WATER MAIN SHALL BE TESTED PRIOR TO TAP OR SERVICE INSTALLATION.

7. WATER SERVICE LINE SHALL BE CONTINUOUS. NO SPLICES ALLOWED.

VB Public Utilities	CITY OF VIRGINIA BEACH - PUBLIC UTILITIES STANDARD DETAILS	SCALE: NOT TO SCALE
		DRAWING NO. PU 8.1
DATE: 10/2023	WATER SERVICE LINE INSTALLATION	SHEET NO. 1 OF 1

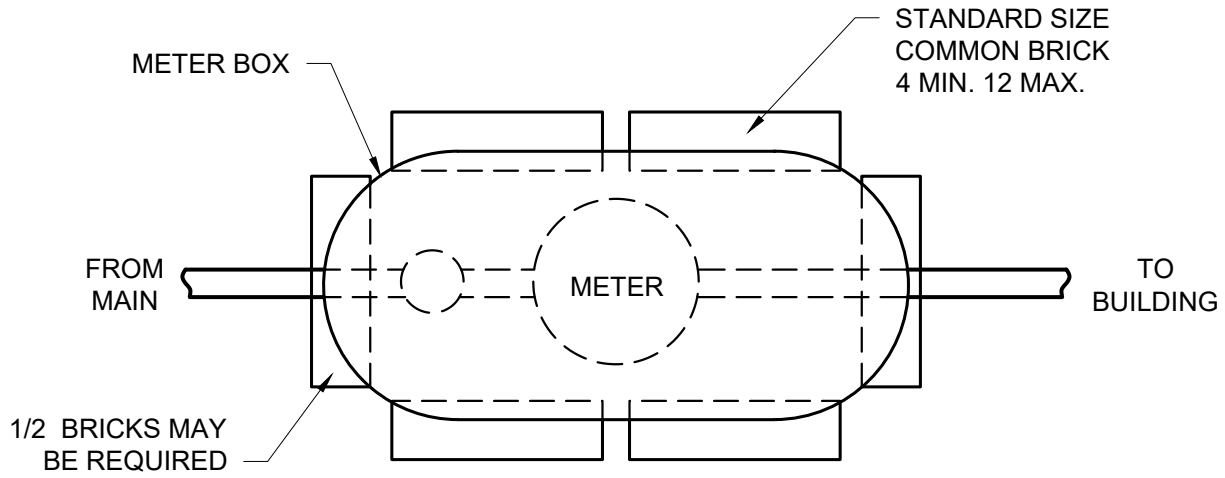

TOP VIEW

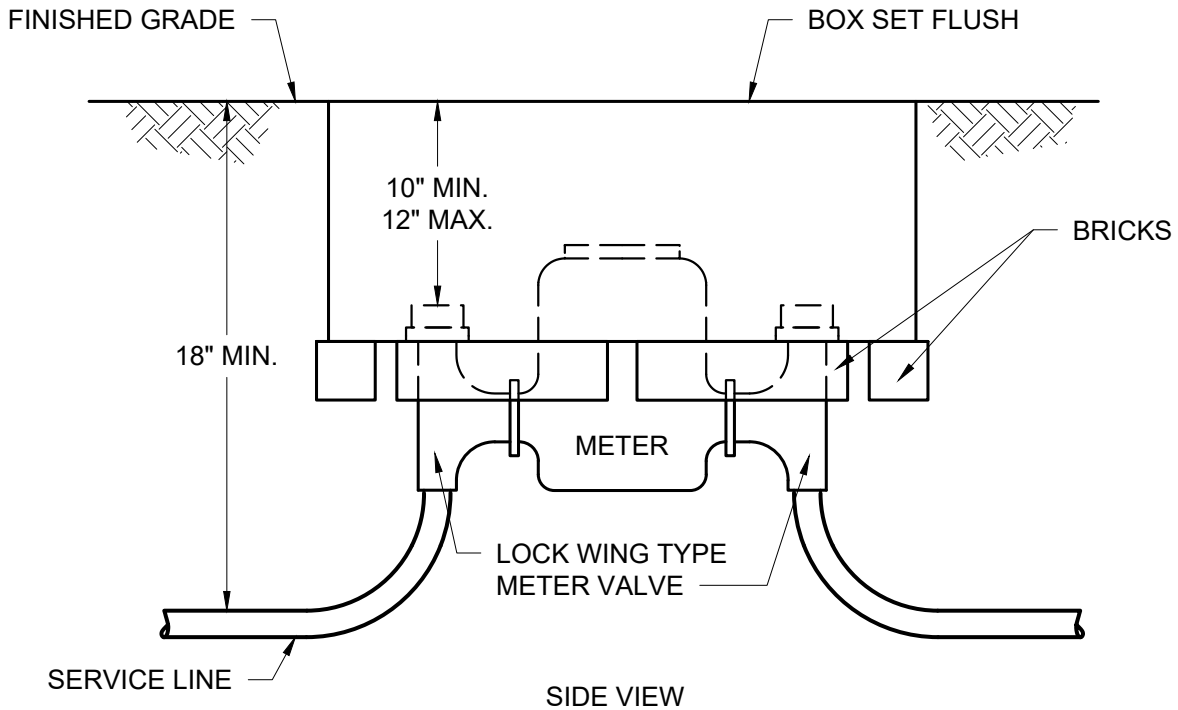

SIDE VIEW

NOTES:

1. SET METER VALVE VERTICALLY PLUMB.

2. SEE PU 8.3 "5/8" AND 1" METER BOX".

Public Utilities	CITY OF VIRGINIA BEACH - PUBLIC UTILITIES STANDARD DETAILS	SCALE: NOT TO SCALE
		DRAWING NO. PU 8.2
	5/8" AND 1" METER BOX SETTING	SHEET NO. 1 OF 1
DATE: 10/2023		

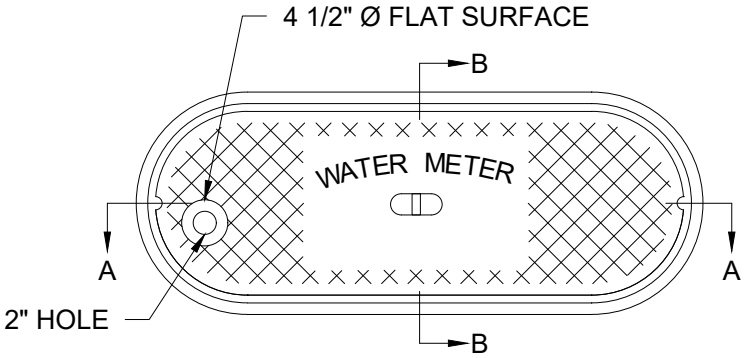

PLAN

SECTION A-A

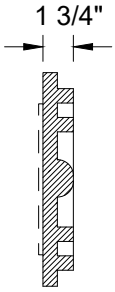

SECTION B-B

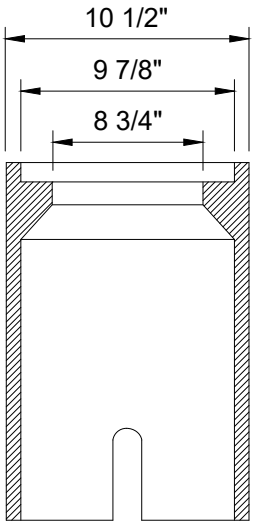

BODY SECTION B-B

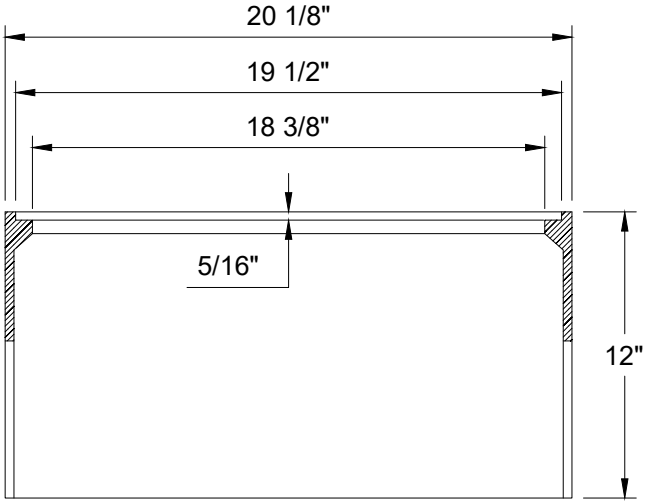

BODY SECTION A-A

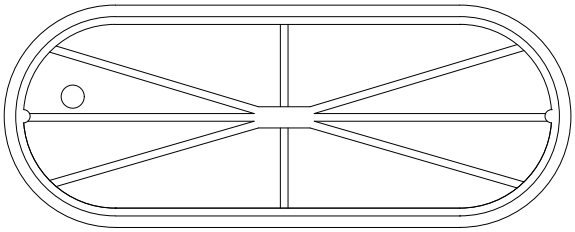

BOTTOM VIEW

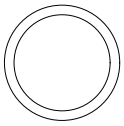

TOP

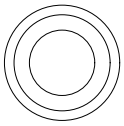

BOTTOM

NOTES:

1. FINISH: ALL CASTINGS SHALL BE MANUFACTURED TRUE TO PATTERN; ALL LIDS SHALL FIT BOXES SNUGLY.
2. TOLERANCE: ALL CASTINGS SHALL HAVE A TOLERANCE OF ±1/8".
3. WEIGHT: 25 LBS. ± 5%.
4. LIDS TO BE COATED WITH BITUMINOUS COAL TAR COATING (TWO COATS).
5. MATERIAL: ASTM A-48 CLASS 30 GRAY IRON.
6. LOADING RATING: 20,000 LB. STATIC LOAD (WHILE ASSEMBLED ON APPROVED METER BOX, APPLIED USING 9"X9" LOAD PATTERN).
7. TOP OF LID SHALL HAVE 4 1/2" DIAMETER FLAT SURFACE TO ALLOW TOUCH READ PAD TO SIT FLUSH WITH LID.
8. THE CITY OF VIRGINIA BEACH RESERVES THE RIGHT TO REJECT ANY LID NOT CONFORMING TO THESE SPECIFICATIONS AND/OR DRAWINGS.

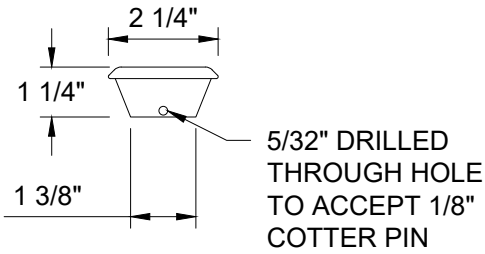

TOUCH READ HOLE PLUG

Public Utilities	CITY OF VIRGINIA BEACH - PUBLIC UTILITIES STANDARD DETAILS	SCALE: NOT TO SCALE
		DRAWING NO. PU 8.3
DATE: 10/2023	5/8" AND 1" METER BOX	SHEET NO. 1 OF 1

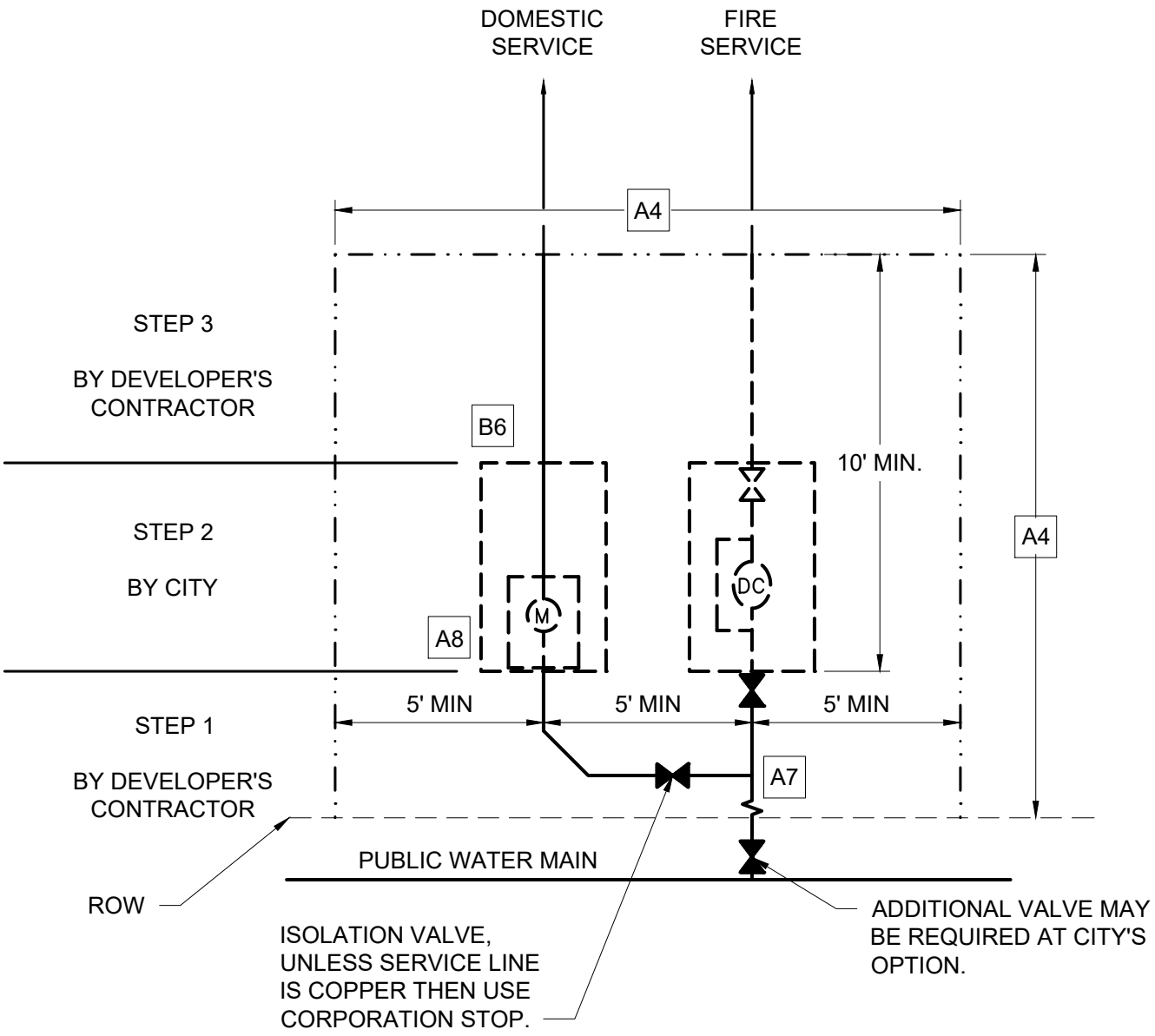

NOTE:

1. DETECTOR CHECK (DC) VAULT SIZE = 36" X 60"
   WATER METER (M) VAULT SIZE = UP TO 1" LINE = MBX-1 HD
   1.5" & 2" = 24" X 48"
   >= 3" = 36" X 60"

2. SEE PU 8.12 "DETECTOR CHECK AND DOMESTIC METER LAYOUT", SHEET 2 OF 2 FOR ADDITIONAL NOTES.

3. EASEMENT WIDTH MUST INCREASED IF AN IRRIGATION METER WILL BE INCLUDED, MINIMUM 20'.

Public Utilities	CITY OF VIRGINIA BEACH - PUBLIC UTILITIES STANDARD DETAILS	SCALE: NOT TO SCALE
		DRAWING NO. PU 8.4
	DETECTOR CHECK AND DOMESTIC METER LAYOUT	SHEET NO. 1 OF 2
DATE: 10/2023		

DETECTOR CHECK/DOMESTIC METER STANDARD RESPONSIBILITY

ENGINEER'S RESPONSIBILITY (DESIGN)

A1. DETERMINE DOMESTIC AND FIRE FLOW REQUIREMENTS.

A2. DESIGN PUBLIC SIDE SO AS NOT TO CONFLICT WITH EXISTING AND PROPOSED UTILITIES.

A3. USE TEES FOR SAME SIZE TAPS, I.E. 8" X 8".

A4. PROVIDE EASEMENT AS NECESSARY. A 15' X 15' MINIMUM MAINTENANCE AREA IS REQUIRED. THIS IS TO INCLUDE RIGHT OF WAY AND EASEMENT AREA. ANY REQUIRED EASEMENT SHALL BE DEDICATED AND RECORDED PRIOR TO INSTALLATION OF THE DETECTOR CHECK AND DOMESTIC METER ASSEMBLIES.

A5. MAXIMUM DEPTH OF SERVICE LINES IN THE MAINTENANCE AREA SHALL BE 36". FIRE SERVICE AND/OR DOMESTIC SERVICE LARGER THAN 2" SHALL HAVE FROM 30" TO 36" OF COVER FROM FINISHED GRADE AT THE VAULT. CURB STOPS FOR DOMESTIC METERS 1" AND SMALLER SHALL HAVE 12" OF COVER FROM FINISHED GRADE AT THE BOX. CURB STOP FOR 1-1/2" AND 2" DOMESTIC METERS SHALL HAVE 18" OF COVER FROM FINISHED GRADE AT THE BOX.

A6. LINES 2" AND SMALLER SHALL BE TYPE “K” SOFT COPPER. ALL OTHER LINES SHALL BE DUCTILE IRON.

A7. A CORPORATION STOP SHALL BE INSTALLED FOR ALL SERVICE LINES 2" AND SMALLER. EITHER A TAPPED TEE OR DOUBLE STRAP SERVICE CLAMP (TAPPING SADDLE) FROM THE APPROVED PRODUCTS LIST SHALL BE USED FOR 1-1/2" OR 2" TAPS. A BRANCH VALVE SHALL BE INSTALLED ON ALL DOMESTIC SERVICE LINES

A8. FLANGED LOCKING TYPE CURB STOPS SHALL BE USED FOR 1-1/2” AND 2” DOMESTIC METERS. LOCKING TYPE CURB STOPS SHALL BE USED FOR 5/8” AND 1” DOMESTIC METERS. SERVICE LINES LARGER THAN 2” SHALL BE CAPPED OR PLUGGED.

A9. BOXES AND VAULTS SHALL NOT BE LOCATED IN PAVED AREAS, SWALES OR BERMS.

A10. PROVIDE A SITE SPECIFIC DETAIL OF THE DETECTOR CHECK INSTALLATION ON THE PLAN. SHOW ALL EXISTING AND PROPOSED UTILITIES IN PLAN AND PROFILE.

A11. 90° BENDS SHALL NOT BE USED.

OWNER'S/CONTRACTOR'S RESPONSIBILITY (CONSTRUCTION)

B1. IF PUBLIC WATER MAIN SHUT DOWN IS REQUIRED, PU INSPECTIONS MUST BE CONTACTED TO SCHEDULE THE SHUT DOWN.

B2. INSTALL ALL PIPE WORK IN SEQUENCE SHOWN ON PU 8.12 "DETECTOR CHECK AND DOMESTIC METER LAYOUT" SHEET 1 OF 2 UNTIL INSTALLATION OF THE DETECTOR CHECK AND DOMESTIC METER HAVE BEEN PERFORMED, A MINIMUM 10' GAP SHALL BE MAINTAINED BETWEEN THE VALVE ON THE FIRE SERVICE LINE AND ANY PRIVATE FIRE SERVICE PIPING INSTALLED. SIMILARLY, THIS 10' GAP SHALL BE MAINTAINED BETWEEN THE CURB STOP ON THE DOMESTIC SERVICE LINE AND ANY PRIVATE DOMESTIC SERVICE PIPING INSTALLED.

B3. TEST THE PUBLIC MAINS AS DIRECTED BY PU INSPECTIONS.

B4. EXCAVATE AREAS WHERE DETECTOR CHECK AND DOMESTIC METER ARE TO BE INSTALLED. EXCAVATED AREAS SHALL BE MAINTAINED UNTIL INSTALLATION OF THE DETECTOR CHECK AND DOMESTIC METER IS COMPLETED (NOTE: SEE A4). PROVIDE FINISHED GRADE STAKES ON EITHER SIDE OF THE WORK AREA. INSTALL 8" OF #57 STONE BASE WITHIN EXCAVATIONS. FINISHED GRADE OF THE #57 STONE SHALL BE BELOW BOTTOM OF PIPE.

B5. CALL 757-385-4175 TO SCHEDULE ON-SITE MEETING WITH PU INSPECTIONS AND PU OPERATIONS FOR APPROVAL TO HAVE DETECTOR CHECK/DOMESTIC METER INSTALLED. CALL 757-385-4175 FOR DETECTOR CHECK/DOMESTIC METER INSTALLATION ONCE ONSITE MEETING HAS BEEN CONDUCTED AND PUBLIC MAINS HAVE BEEN RELEASED.

B6. CONNECT ON-SITE UTILITIES TO THE DETECTOR CHECK AND/OR DOMESTIC METER ASSEMBLY.

B7. CALL 757-385-4175 TO ACTIVATE THE SYSTEM.

B8. SET METER BOXES / VAULTS TO FINISHED GRADE.

CITY'S RESPONSIBILITY

C1. PROVIDE DETECTOR CHECK VAULT, DOMESTIC METER BOX / VAULT, AND ONE COURSE OF BLOCK FOR OWNER/CONTRACTOR TO INSTALL.

C2. INSTALL DETECTOR CHECK AND DOMESTIC METER ASSEMBLIES.

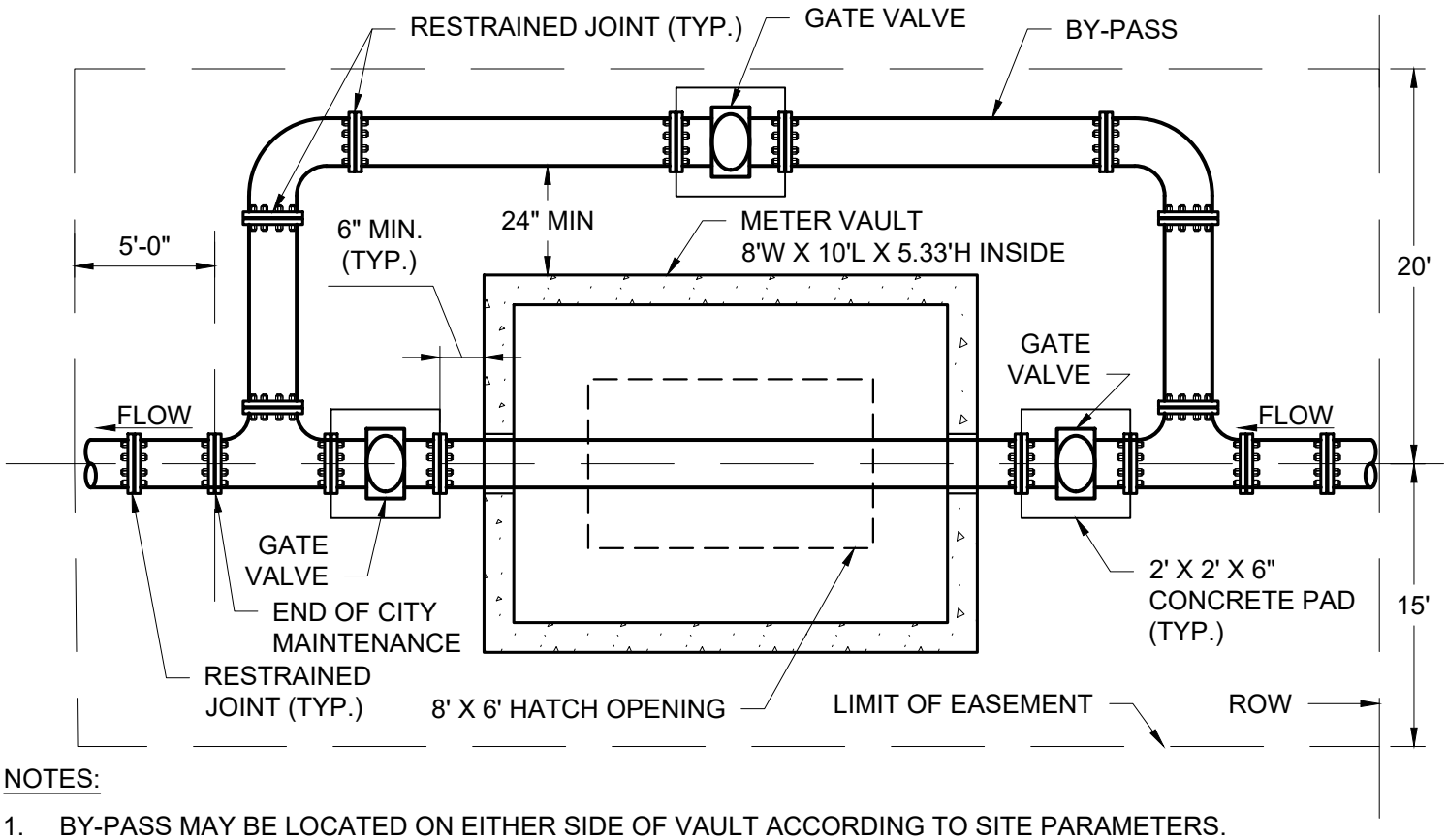

NOTES:

1. BY-PASS MAY BE LOCATED ON EITHER SIDE OF VAULT ACCORDING TO SITE PARAMETERS.
2. METER ASSEMBLY TO BE INSTALLED BY THE CITY OF VIRGINIA BEACH DEPARTMENT OF PUBLIC UTILITIES.
3. ALL PIPES OUTSIDE THE VAULT SHALL BE MECHANICAL JOINT. RESTRAINED AGAINST THRUST USING RETAINER GLANDS.
4. NO JOINTS SHALL EXIST WITHIN METER VAULT PRIOR TO CITY INSTALLED METER CUT-IN.
5. COMBINATION METER ASSEMBLY SHALL NOT TO BE PLACED IN AREAS SUBJECT TO VEHICULAR TRAFFIC.
6. VAULT MAY BE CAST IN PLACE OR PRECAST. PRECAST VAULTS SHALL MATCH THE INTERIOR DIMENSIONS.
7. USE OF PRECAST VAULTS WILL REQUIRE SUBMITTAL AND APPROVAL OF SHOP DRAWINGS. SHOP DRAWINGS MUST BE SEALED BY A PROFESSIONAL ENGINEER LICENSED IN THE COMMONWEALTH OF VIRGINIA.
8. CONCRETE SHALL HAVE A MINIMUM 28 DAYS STRENGTH OF 4,000 P.S.I.
9. REBAR SHALL CONFORM TO ASTM A-615, GRADE 60.
10. MINIMUM COVER FOR REINFORCING IS 2” IF THE CONCRETE IS EXPOSED TO AIR AND 3” IF CAST AGAINST OR PERMANENTLY EXPOSED TO EARTH.
11. VAULT AND HATCH SHALL BE RATED FOR H20 LOADING.
12. HATCH SHALL BE CONSTRUCTED OF ALUMINUM AND BE DOUBLE LEAF WITH LOCKING MECHANISM.
13. HATCH SHALL HAVE CHANNEL FRAMES AND BE CAST IN THE TOP SLAB. BOLT IN HATCHES ARE NOT PERMITTED.
14. VAULT PENETRATIONS SHALL BE CAST IN PLACE WALL SLEEVES SEALED WITH LINK SEALS.
15. THE VAULT TOP SHALL BE SET FLUSH WITH THE FINISH GRADE.

Public Utilities	CITY OF VIRGINIA BEACH - PUBLIC UTILITIES STANDARD DETAILS	SCALE: NOT TO SCALE
		DRAWING NO. PU 8.5
DATE: 10/2023	COMBINATION METER ASSEMBLY 10" AND SMALLER	SHEET NO. 1 OF 3

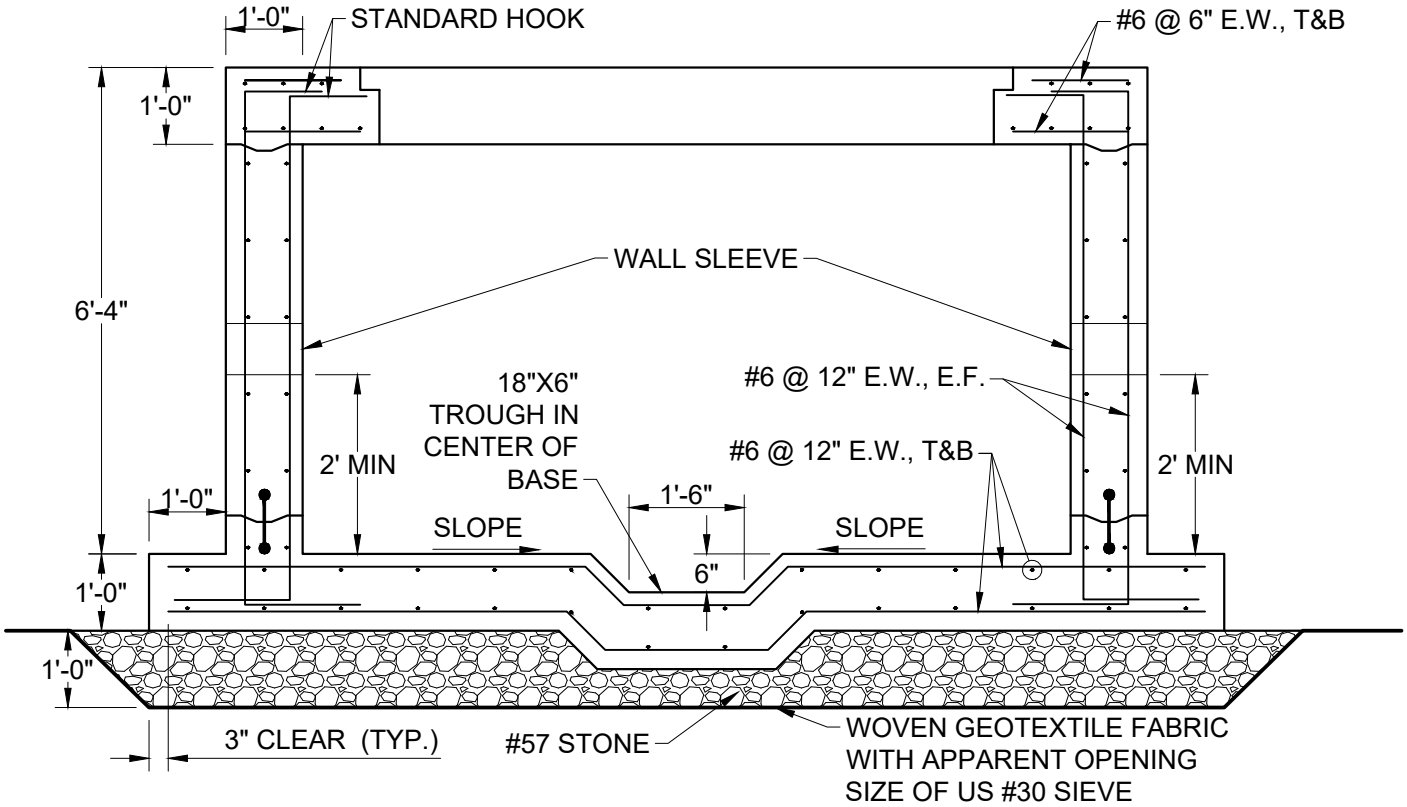

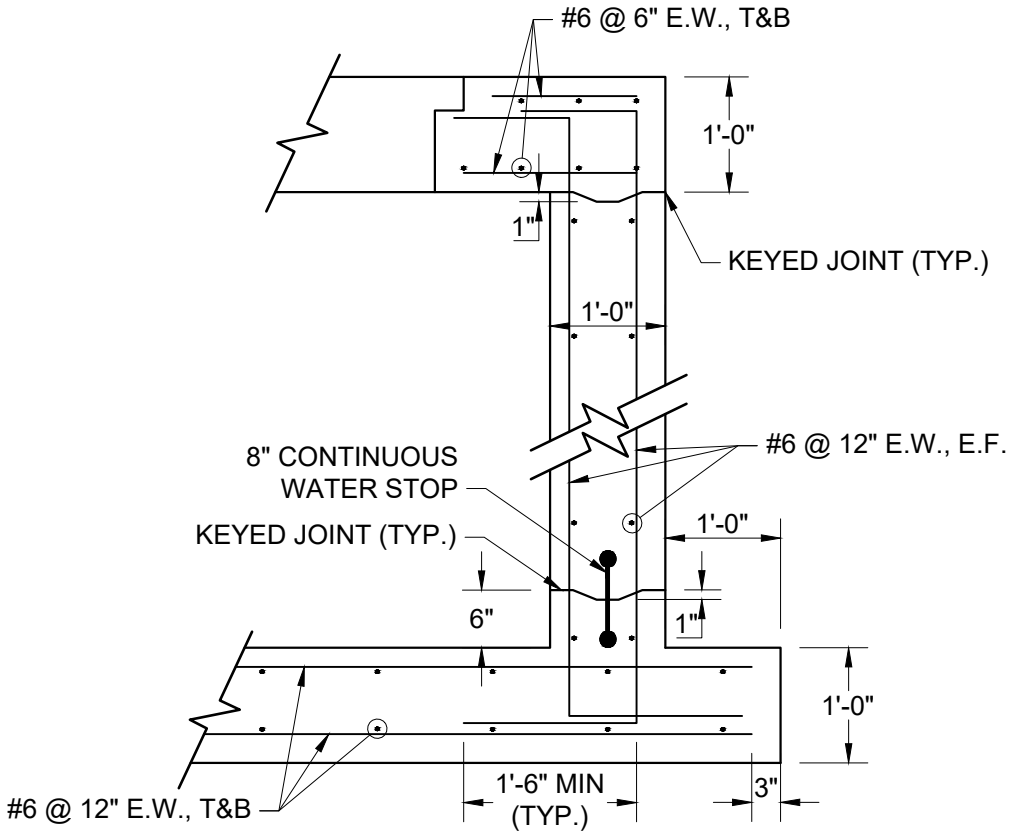

SECTIONS

VB Public Utilities	CITY OF VIRGINIA BEACH - PUBLIC UTILITIES STANDARD DETAILS	SCALE: NOT TO SCALE
		DRAWING NO. PU 8.5
	COMBINATION METER ASSEMBLY 10" AND SMALLER	SHEET NO. 2 OF 3
DATE: 10/2023		

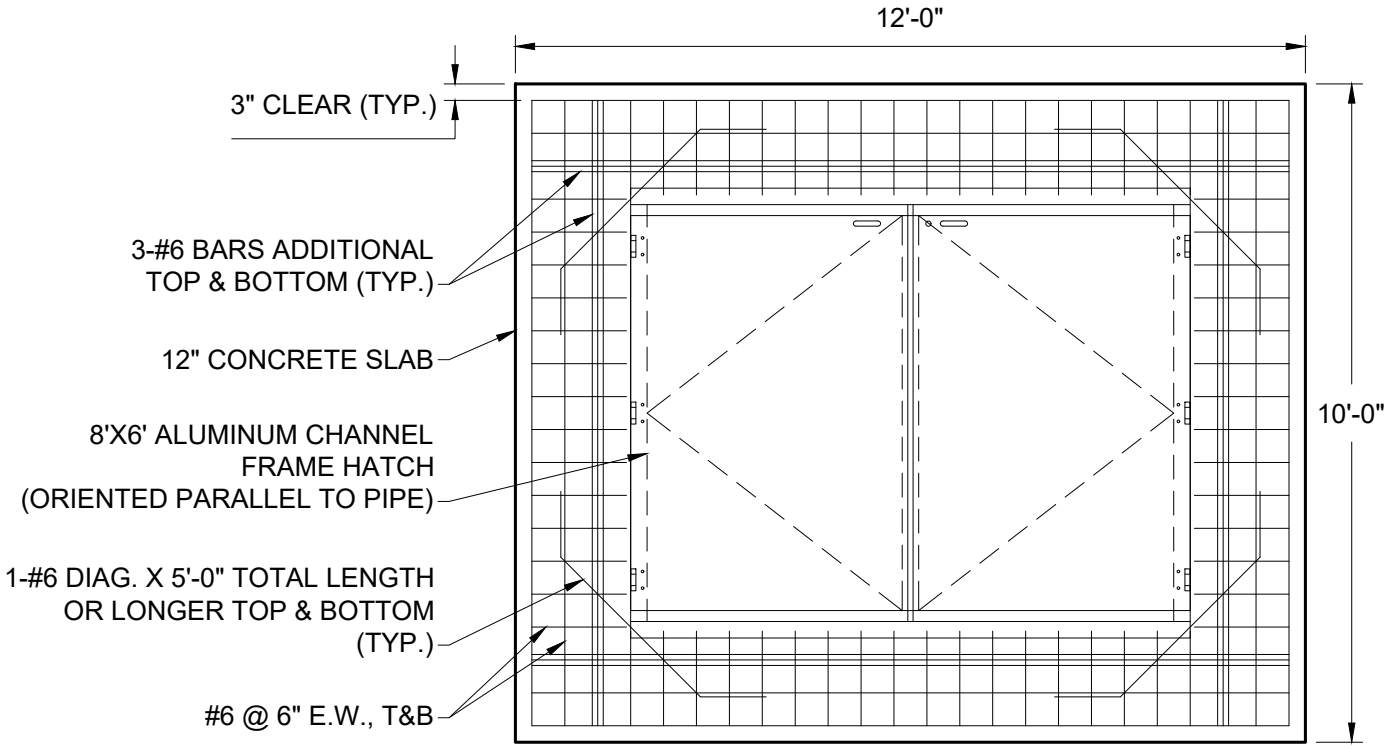

TOP SLAB

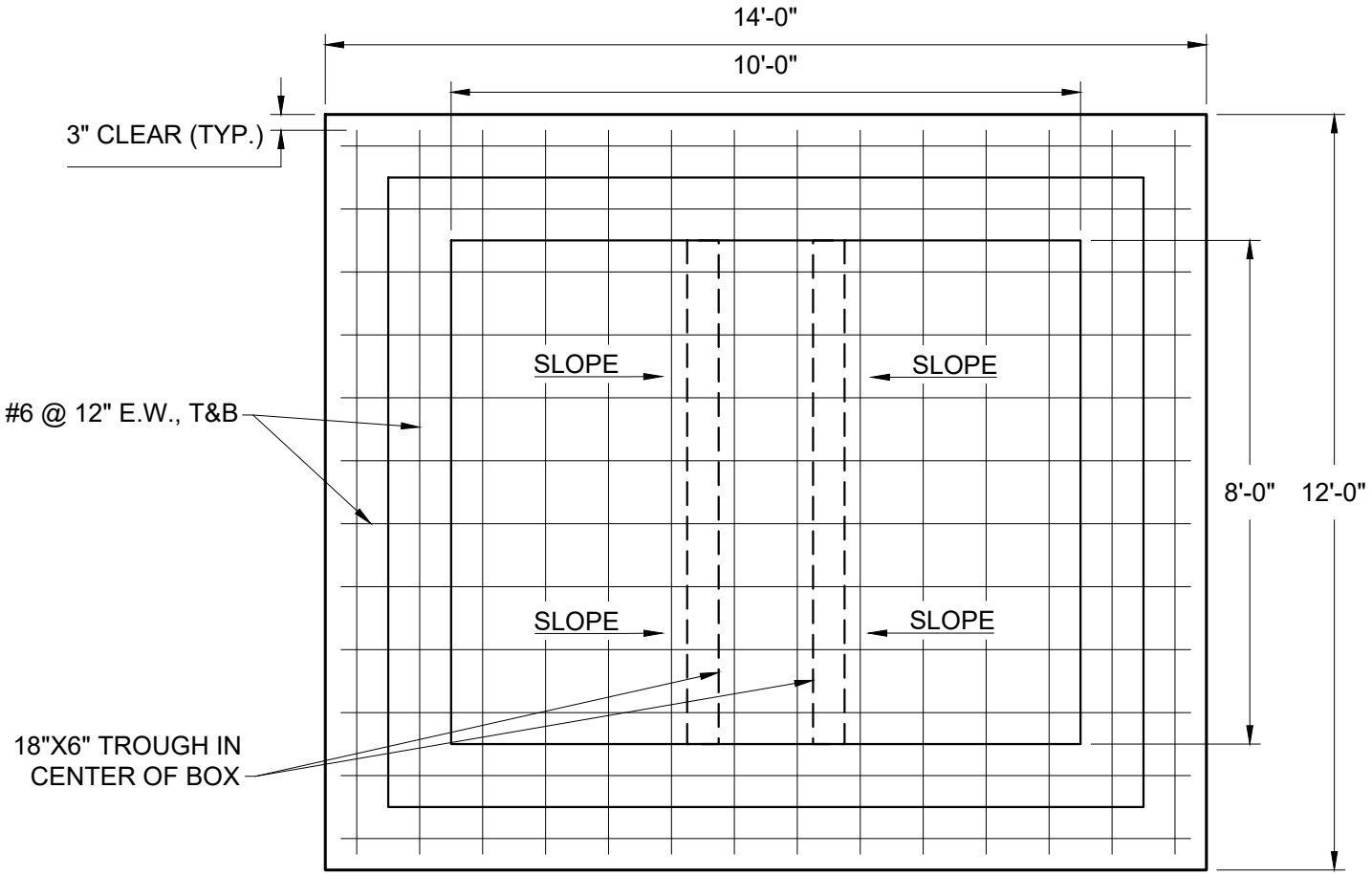

BOTTOM SLAB

Public Utilities	CITY OF VIRGINIA BEACH - PUBLIC UTILITIES STANDARD DETAILS	SCALE: NOT TO SCALE
		DRAWING NO. PU 8.5
DATE: 10/2023	COMBINATION METER ASSEMBLY 10" AND SMALLER	SHEET NO. 3 OF 3

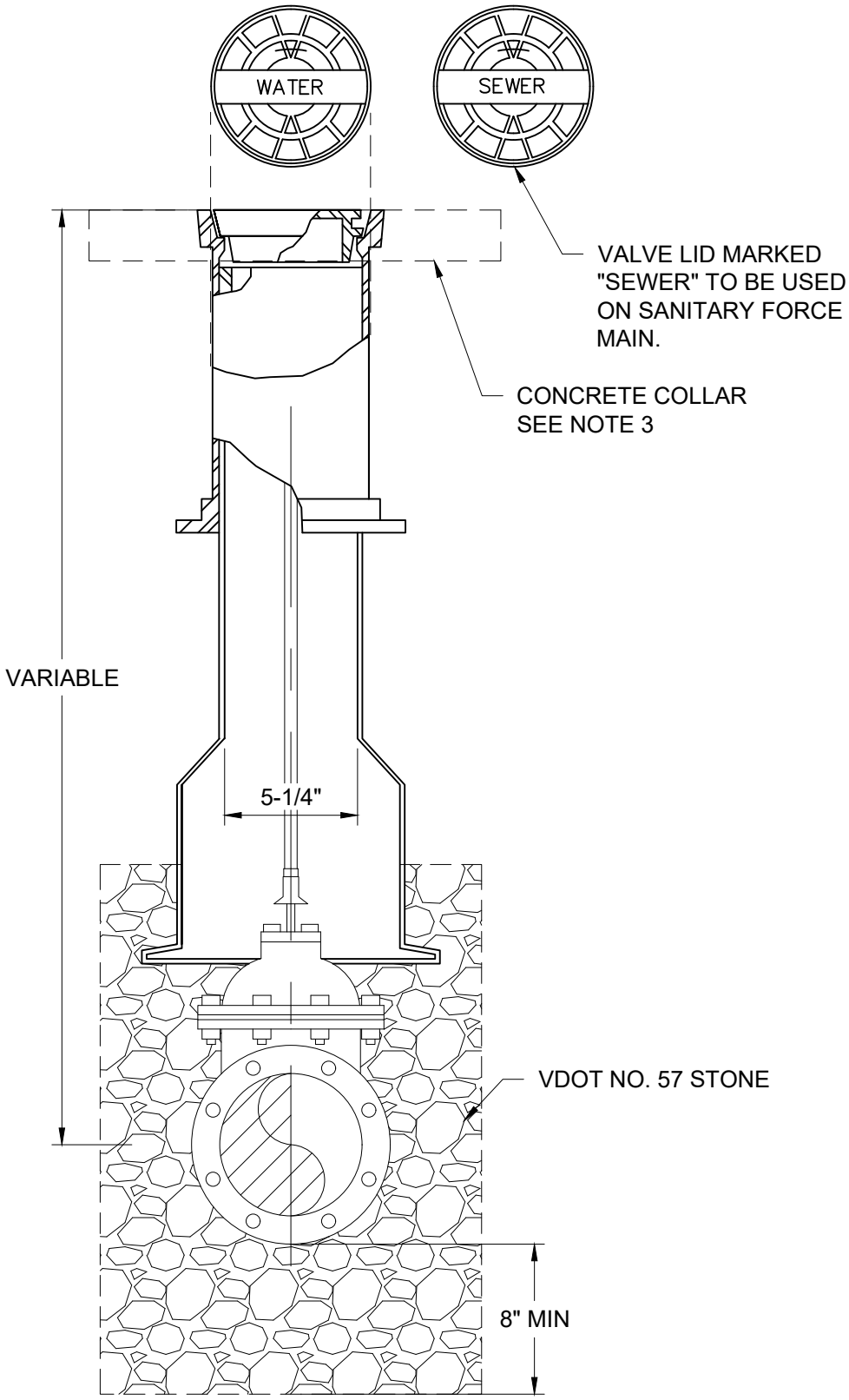

NOTES:

1. BUFFALO PATTERN, TWO-PIECE SLIDING TYPE, ADJUSTABLE VALUE BOX, 5-1/4" SHAFT.
2. THREADED BOXES NOT PERMITTED.
3. ADD 2' X 2' X 6" CONCRETE COLLAR FOR VALVE BOXES NOT WITHIN A PAVED AREA.

Public Utilities	CITY OF VIRGINIA BEACH - PUBLIC UTILITIES STANDARD DETAILS	SCALE: NOT TO SCALE
		DRAWING NO. PU 8.6
DATE: 10/2023	VALVE BOX	SHEET NO. 1 OF 1

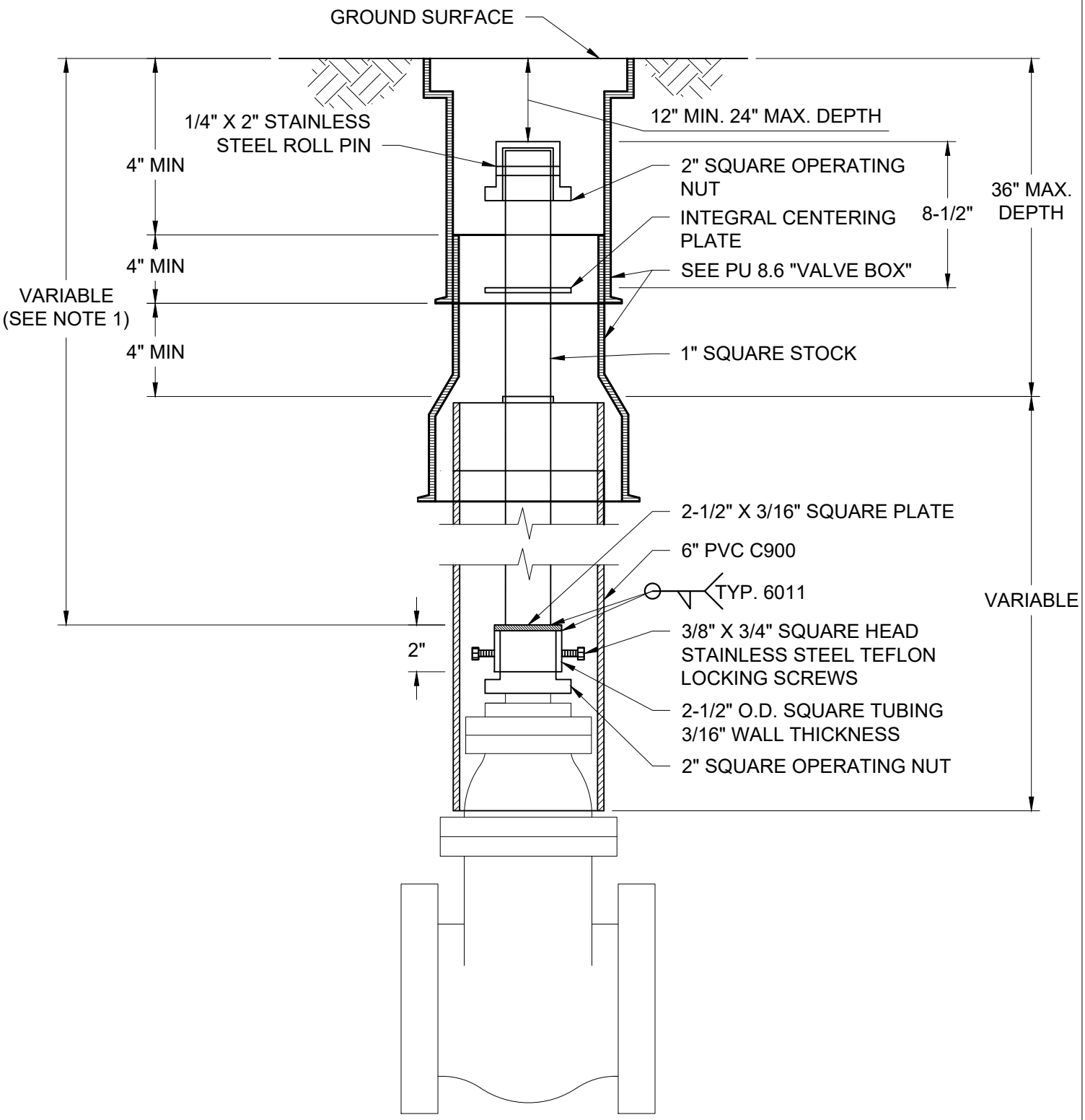

NOTE:

1. DEPTH GREATER THAN 5-FEET REQUIRES A STEM EXTENSION.
2. VALVE NUTS SHALL BE RED FOR WATER & BLACK FOR SEWER.

Public Utilities	CITY OF VIRGINIA BEACH - PUBLIC UTILITIES STANDARD DETAILS	SCALE: NOT TO SCALE
		DRAWING NO. PU 8.7
DATE: 10/2023	VALVE STEM EXTENSION	SHEET NO. 1 OF 1

COLOR CODE

OWNER	BONNET	CAPS	BARREL
CITY	*	YELLOW	YELLOW
PRIVATE	BLUE	BLUE	RED
DRY (DRAFTING)	BLUE	BLUE	BLUE

*BONNET COLOR

1500+ GPM	LIGHT BLUE (RUST-OLEUM - MARLIN BLUE)
1000 - 1499 GPM	GREEN (RUST-OLEUM - SAFETY GREEN)
500 - 999 GPM	ORANGE (RUST-OLEUM - SAFETY ORANGE)
499 - GPM	RED (RUST-OLEUM - SAFETY RED)

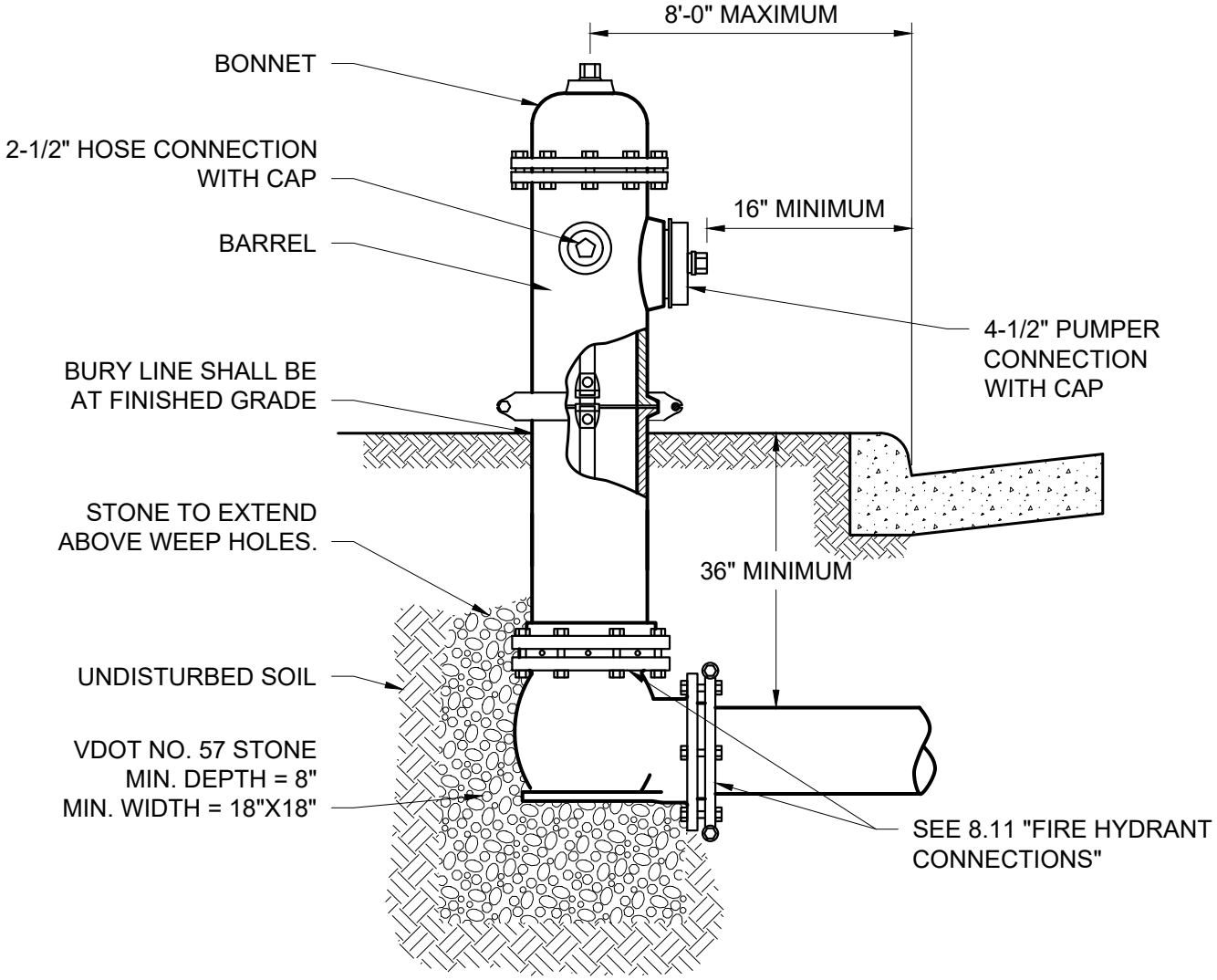

NOTES:

1. WHERE FIRE HYDRANT IS LOCATED BEHIND A DITCH, THE DITCH SHALL PIPED IN FRONT OF THE HYDRANT.
2. PROVIDE BLUE REFLECTIVE MARKERS IN PAVEMENT IN FRONT OF HYDRANT.
3. HYDRANT SHALL BE VERTICALLY PLUMB, PUMPER CONNECTION SHALL FACE 90° TO STREET ℄ UNLESS OTHERWISE SPECIFIED.
4. WHERE NO CURB IS EXISTING OR PROPOSED, MAXIMIZE SET BACK WITH IN RIGHT OF WAY.
5. HYDRANTS NOT IN SERVICE MUST BE IDENTIFIED WITH APPROVED OUT OF SERVICE SIGN.

VB Public Utilities	CITY OF VIRGINIA BEACH - PUBLIC UTILITIES STANDARD DETAILS	SCALE: NOT TO SCALE
		DRAWING NO. PU 8.8
DATE: 10/2023	FIRE HYDRANT SETTING	SHEET NO. 1 OF 1

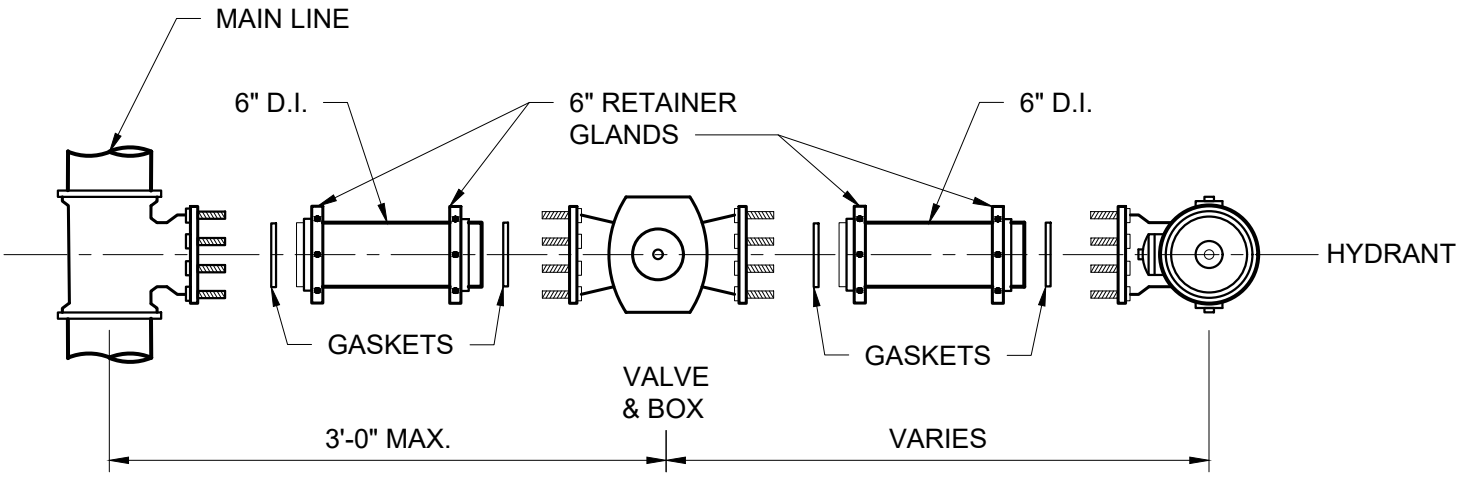

NOTES:

1. ALL HYDRANT CONNECTIONS MUST BE FIELD INSPECTED BY A PUBLIC UTILITIES INSPECTOR PRIOR TO BACKFILLING.

2. ALL JOINTS FROM MAIN LINE TO HYDRANT SHALL BE RESTRAINED VIA RETAINER GLAND, GASKETED RESTRAINT, OR SWIVEL ADAPTOR.

Public Utilities	CITY OF VIRGINIA BEACH - PUBLIC UTILITIES STANDARD DETAILS	SCALE: NOT TO SCALE
		DRAWING NO. PU 8.9
DATE: 10/2023	FIRE HYDRANT CONNECTIONS	SHEET NO. 1 OF 1

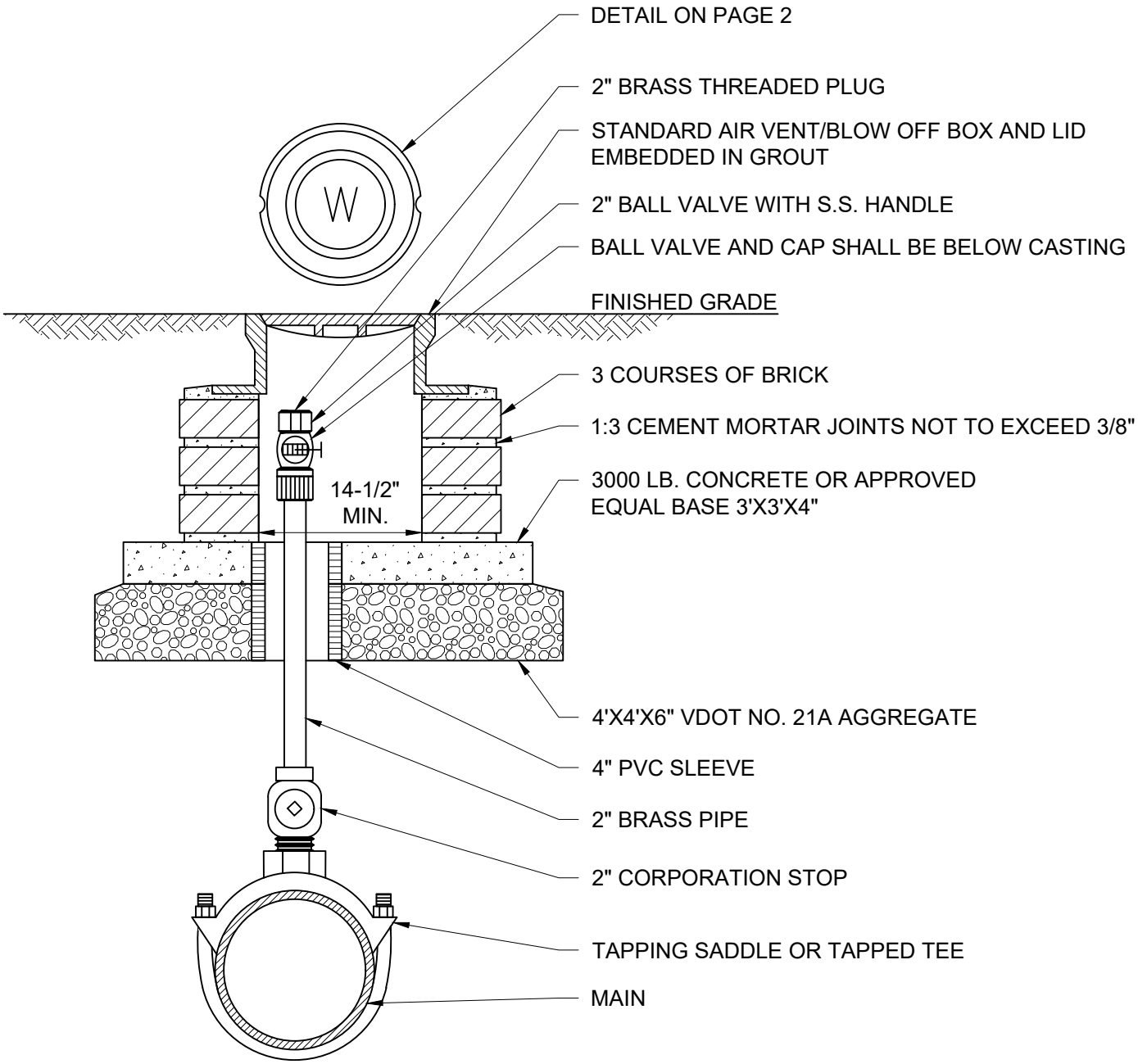

NOTE:

1. ALL APPURTENANCES FOR WATER MAIN ASSEMBLIES SHALL BE CONSTRUCTED OF NON-LEAD COMPONENTS

Public Utilities	CITY OF VIRGINIA BEACH - PUBLIC UTILITIES STANDARD DETAILS	SCALE: NOT TO SCALE
		DRAWING NO. PU 8.10
DATE: 10/2023	MANUAL AIR VENT/BLOW OFF ASSEMBLY	SHEET NO. 1 OF 2

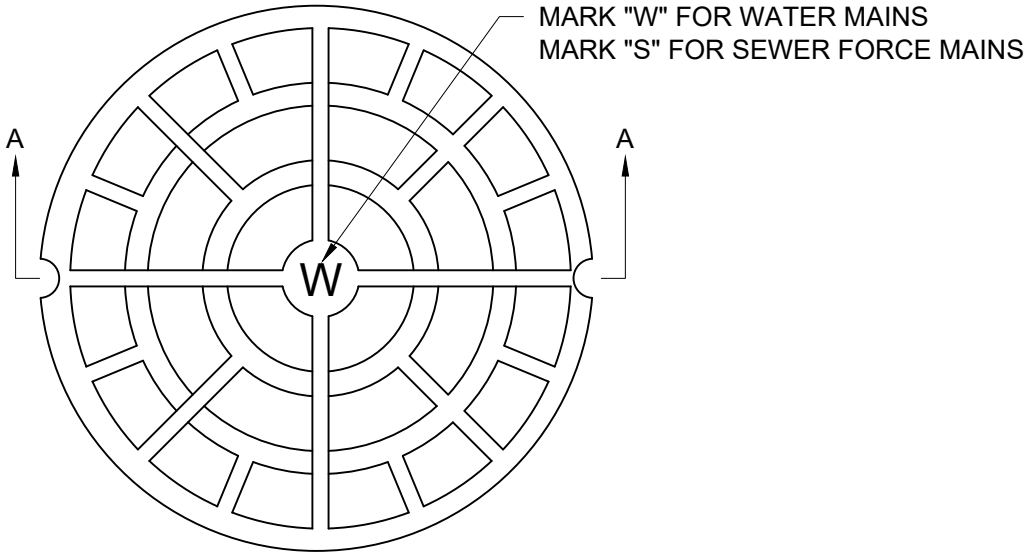

PLAN

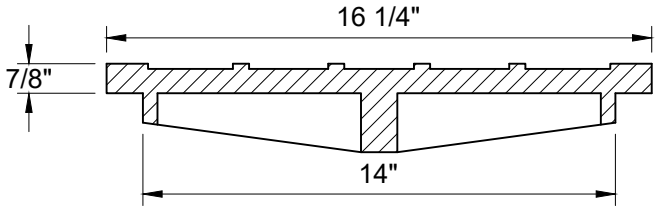

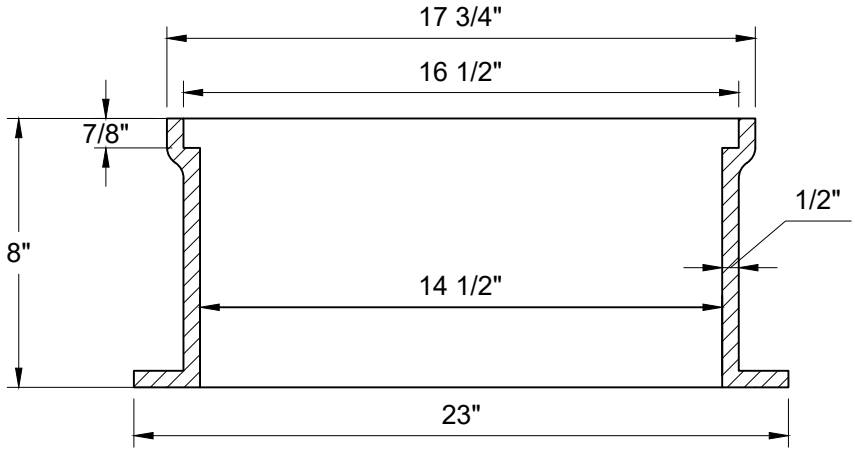

SECTION - AA

Public Utilities DATE: 10/2023	CITY OF VIRGINIA BEACH - PUBLIC UTILITIES STANDARD DETAILS	SCALE: NOT TO SCALE
	MANUAL AIR VENT/BLOW OFF ASSEMBLY	DRAWING NO. PU 8.10
		SHEET NO. 2 OF 2

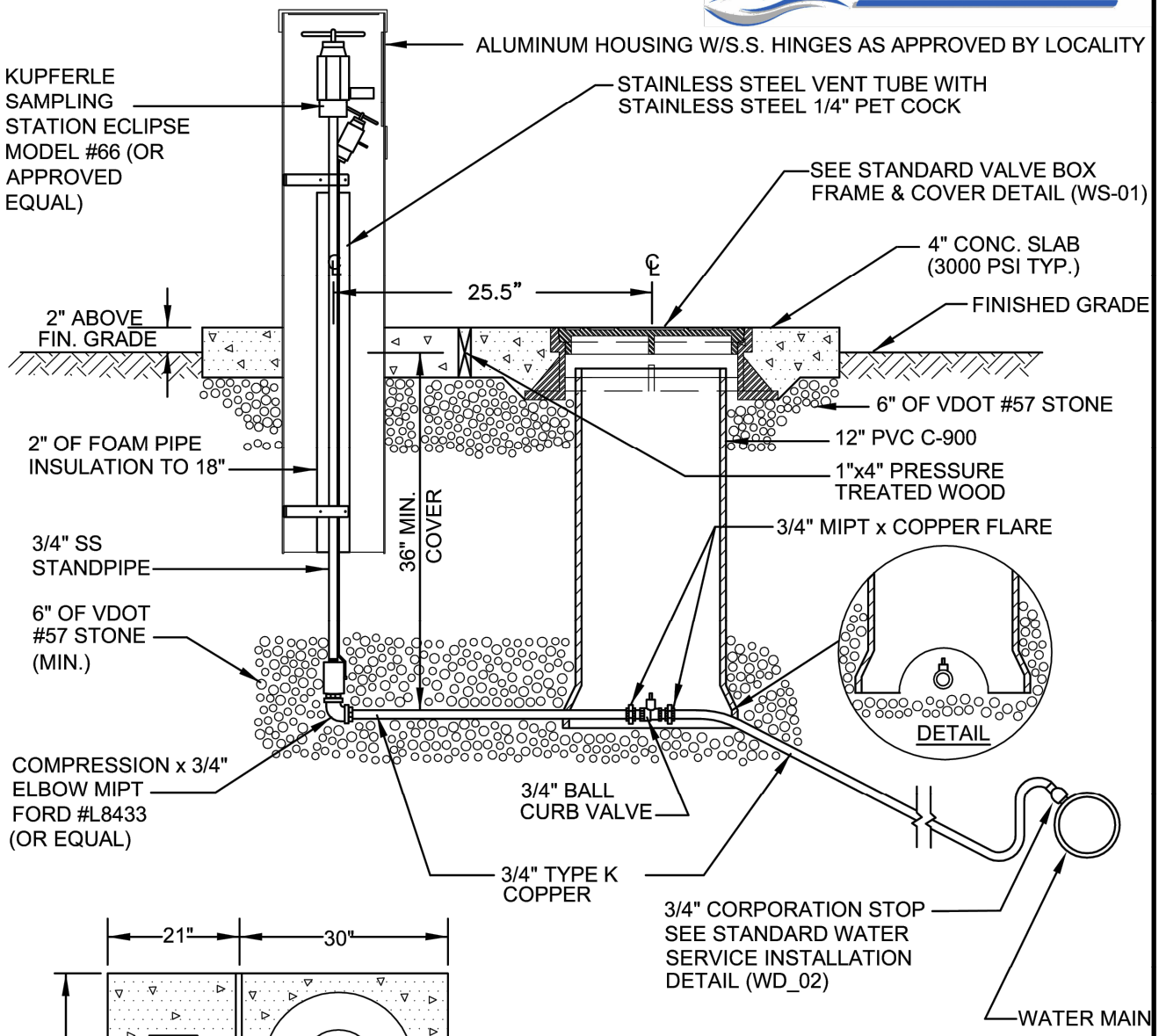

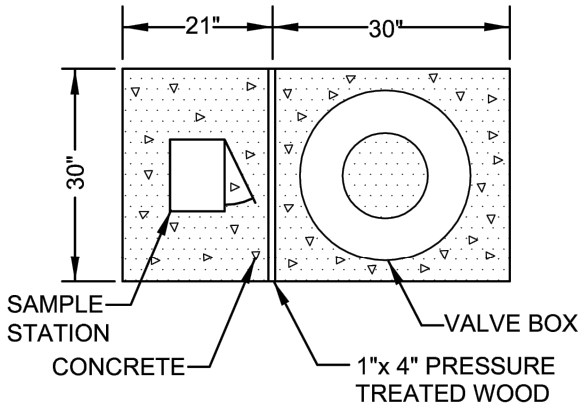

PLAN VIEW

NOTE:
1. COMPACT AROUND BRASS STANDPIPE TO 95% MODIFIED PROCTOR.
2. SAMPLE STATION TO BE LOCATED OUTSIDE OF R/W CLEAR ZONE.

WATER SAMPLING STATION

NOT TO SCALE

REFERENCE	CATEGORY	DATE	SHEET No.	DETAIL No.
200, 801	WATER	6/16	1 OF 1	WD_13

Public Utilities

DATE: 10/2023

CITY OF VIRGINIA BEACH - PUBLIC UTILITIES
STANDARD DETAILS

WATER SAMPLING STATION

SCALE: NOT TO SCALE

DRAWING NO. PU 8.11

SHEET NO. 1 OF 1

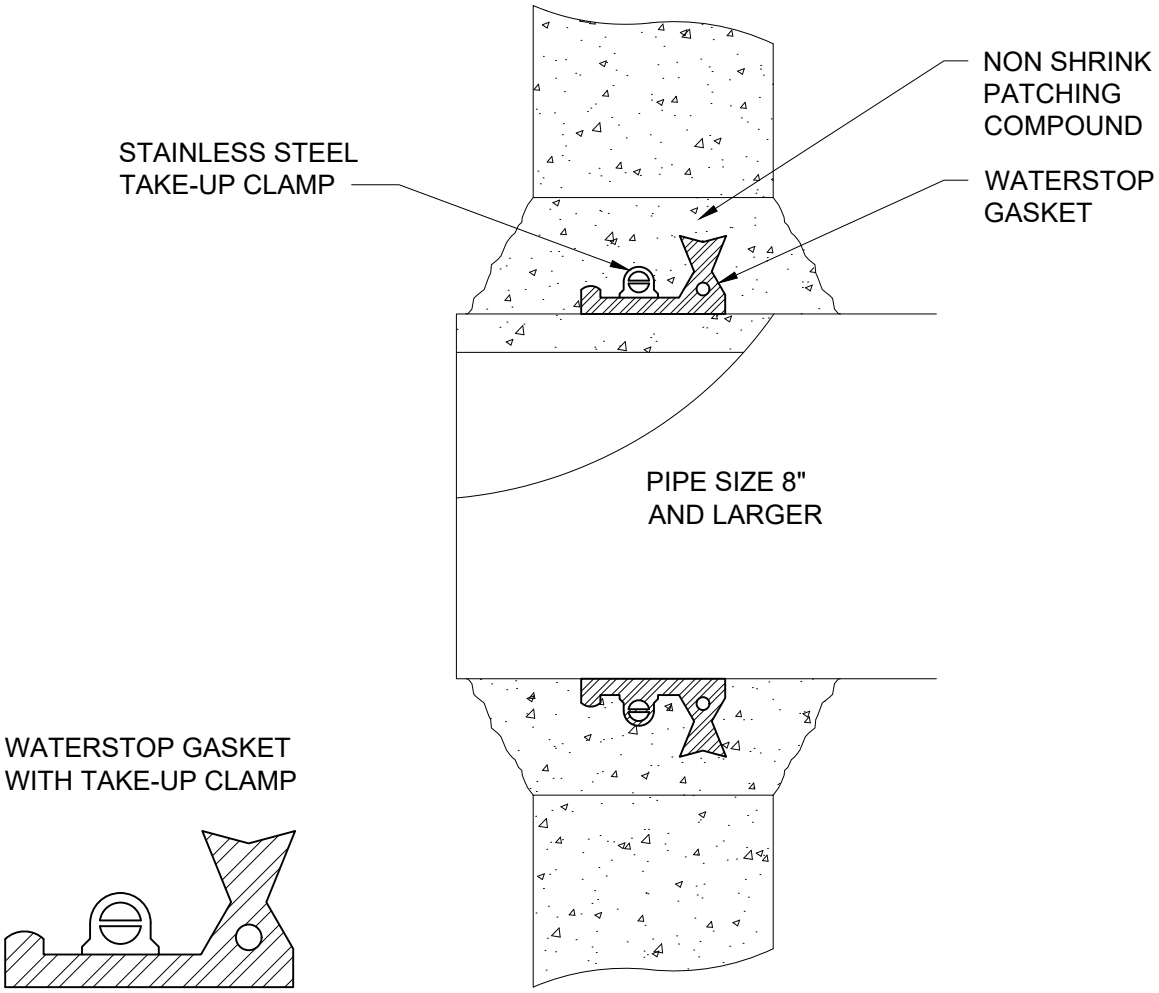

NOTES:

1. USE OF THIS DETAIL REQUIRES VARIANCE APPROVAL.
2. HOLE SIZE SHOULD BE NOT LESS THAN 3.5" GREATER IN DIAMETER THAN THE PIPE OUTER DIAMETER.
3. DETAIL APPLICABLE ONLY WHEN CORE DRILL IS NOT FEASIBLE.

Public Utilities	CITY OF VIRGINIA BEACH - PUBLIC UTILITIES STANDARD DETAILS	SCALE: NOT TO SCALE
		DRAWING NO. PU 9.1
DATE: 10/2023	WATERSTOP	SHEET NO. 1 OF 1

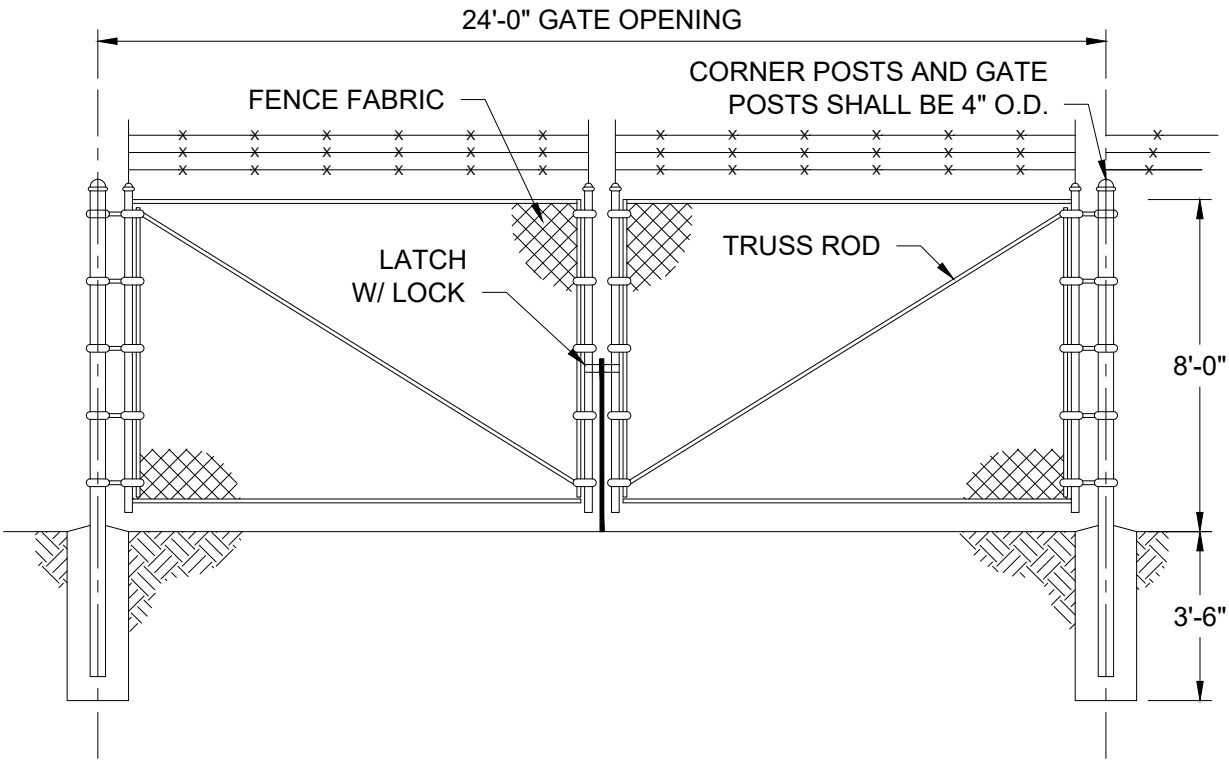

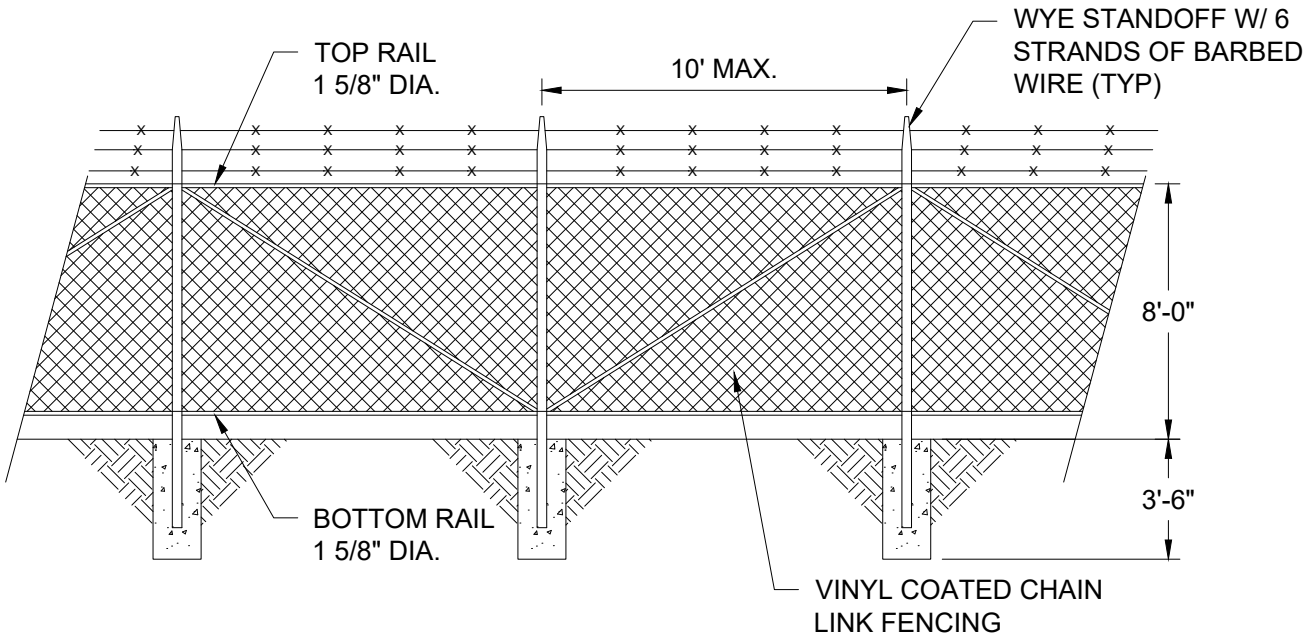

NOTE

1. CONTRACTOR SHALL INSTALL AN ADDITIONAL 3" DIA. POST WITH 3/8" DIA. STEEL BAR, LOCATED TO SECURE GATE IN AN OPEN POSITION 90 DEGREES FORM THAT SHOWN ABOVE. GATE SHALL SWING TOWARDS THE CITY'S PROPERTY.

Public Utilities	CITY OF VIRGINIA BEACH - PUBLIC UTILITIES STANDARD DETAILS	SCALE: NOT TO SCALE
		DRAWING NO. PU 9.2
DATE: 10/2023	SECURITY FENCE	SHEET NO. 1 OF 2

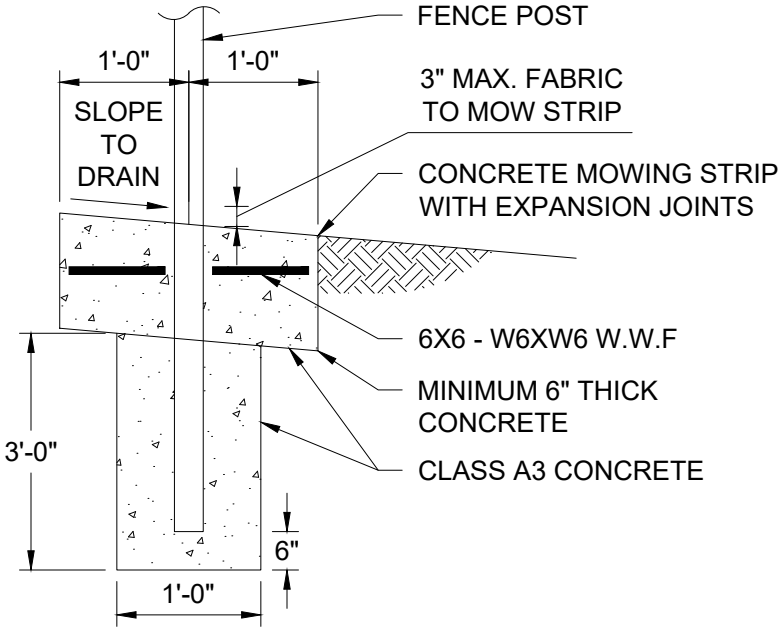

SECTION VIEW

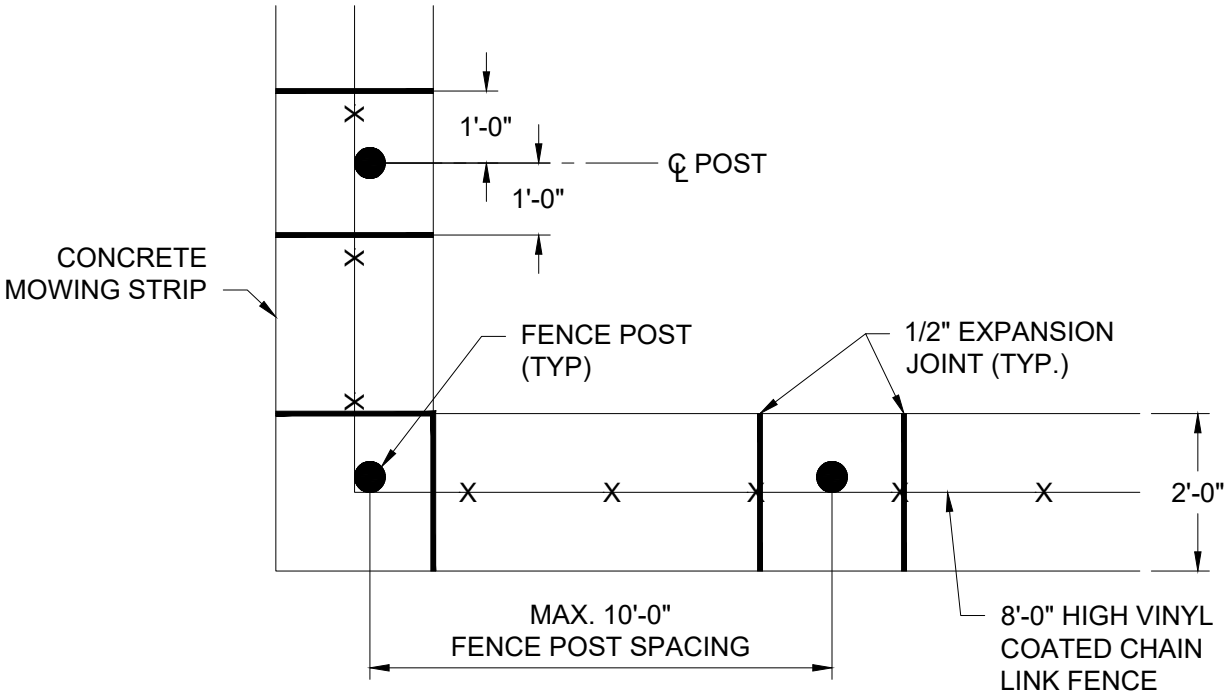

PLAN VIEW

MOW STRIP DETAIL

Public Utilities	CITY OF VIRGINIA BEACH - PUBLIC UTILITIES STANDARD DETAILS	SCALE: NOT TO SCALE
		DRAWING NO. PU 9.2
DATE: 10/2023	SECURITY FENCE	SHEET NO. 2 OF 2

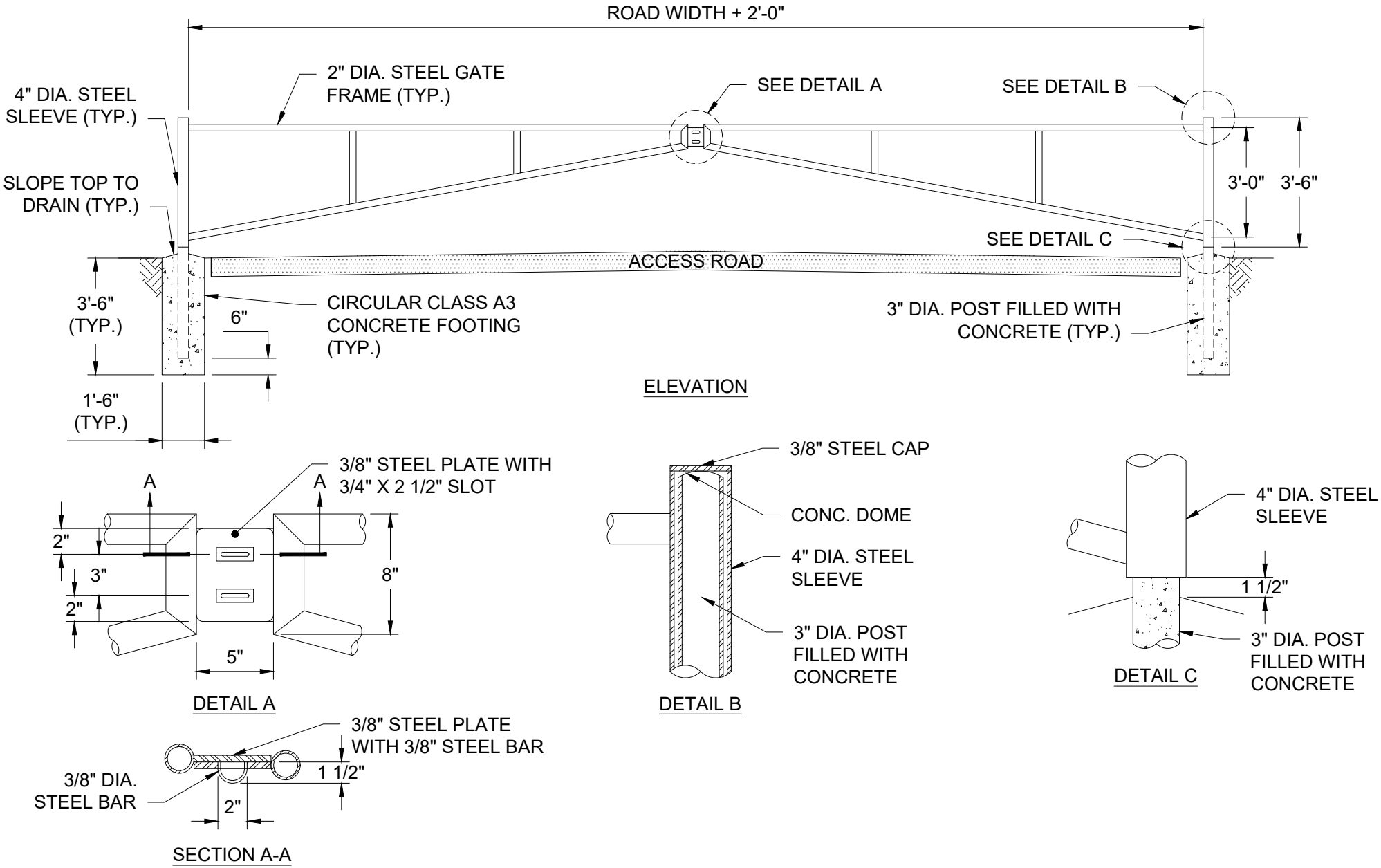

Public Utilities

DATE: 10/2023

CITY OF VIRGINIA BEACH - PUBLIC UTILITIES
STANDARD DETAILS

SWING ENTRANCE GATE

SCALE: NOT TO SCALE

DRAWING NO. PU 9.3

SHEET NO. 1 OF 2

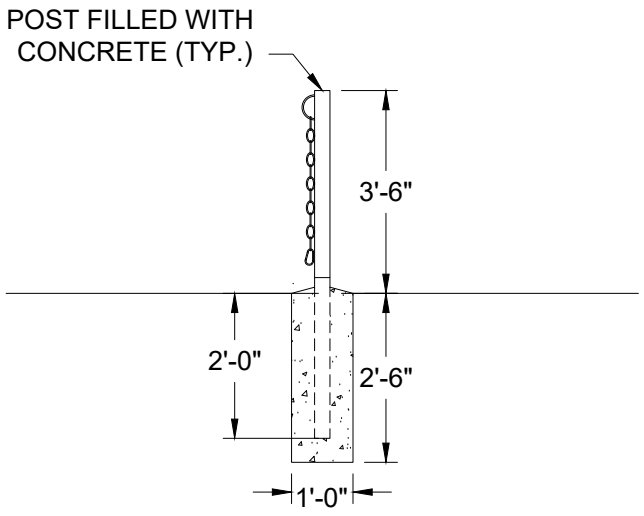

DETAIL D

NOTES:

1. STEEL USED IN MANUFACTURE OF THE GATES SHALL BE HOT DIPPED GALVANIZED.
2. ALL WELDS SHALL BE 3/16" FILLETS ALL AROUND.
3. PIPE MATERIAL SHALL BE SCHEDULE 40 STEEL. DIAMETERS ARE NOMINAL PIPE SIZE.
4. CONTRACTOR SHALL INSTALL AN ADDITIONAL 3" DIA. POST WITH 3/8" DIA. STEEL BAR, LOCATED TO SECURE GATE IN AN OPEN POSITION 90 DEGREES FROM THAT SHOWN ABOVE. STEEL BAR IS TO BE MOUNTED IN A CONCRETE BASE AS SEEN WITH MAIN POST INSTALLATION.
5. GATE TIE DOWN POST TO BE VERIFIED AND APPROVED BY CITY.
6. PROVIDE TWO (2) 2" O.D. PIPES AND INSTALL WITH CONCRETE FOOTING (12" X 30" D) FOR TIE-DOWN WHEN GATE IS CLOSED. SEE DETAIL D.
7. SWING DIRECTION TO BE VERIFIED AND APPROVED BY CITY.
8. REFLECTIVE TAPE OR SIGN WILL BE MOUNTED ON FRONT OF GATE FOR NIGHT SAFETY.