VT-TPTZ32HRAN-8PNS
Transcendent Gen IV 8 MegaPixel [4K] 32× IP PTZ with A.I. Powered Facial Detection and Auto-Tracking

QUICK START GUIDE



**Shown with optional wall mount VT-TPT23HR-WM*



KEY FEATURES

- 1/2.8" 8 MegaPixel [4K] SONY STARVIS® Progressive Scan StarlightCMOS Sensor
- NDAA Compliant
- Up to 8.0 MegaPixel [4K] (3840 × 2160) Resolution @ 30fps
- Ultra High-Speed Pan / Tilt / Zoom with 32× Optical Zoom Lens (4.8- 154mm Focal Length)
- Smart IR with 650' (200m) IR Range
- Real-Time Auto Zoom Tracking: Transcendent GEN IV IP PTZ Cameras feature the most advanced PTZ Auto-Tracking available, powered by A.I.!
- AI Facial Detection: Transcendent GEN IV Advanced Analytics deliver improved Facial Detection, with up to 95% accuracy!
- Intelligent Tracking: Intelligent tracking is capable of tracking people, cars, and bicycles entering and exiting the camera's view
- True 120dB WDR (Wide Dynamic Range)
- Smart H.265+/H.265/H.264+/H.264/MJPEG Compression
- True Day/Night with ICR Cut Filter with Auto/Manual Gain Control
- 1 Alarm Input + 1 Alarm Output
- 1 Audio Input (MIC in) + 1 Audio Output
- Built-in MicroSD Card Slot, Supporting Local Recording up to 256GB
- Scalable Video Coding (SVC)
- Stealth Gimbal Driving Technology
- ONVIF Compliant with Zero Configuration + API and SDK
- IP66 Ingress Protection + IK10 Impact (Excludes Glass Window)
- DC24V, 24VAC or PoE++ ***Power Supply Included, PoE Injector Required for PoE Power***
- 1 RJ45 10M/100M Adaptive Ethernet
- Optional Pendant, Semi-Flush, Corner, Pole, and Wall Mounts Available [See pg. 11]
- 3-Year Warranty

** Please research local, state and federal laws regarding the implementation of audio surveillance*
*** SONY™ is an independent and wholly owned corporation and has not tested or verified this product's compatibility with this sensor.*

PLEASE NOTE:
Complete User Guide, Software, Tools, and Updates are available online. Scan the QR Code or visit:
http://www.vitekcctv.com/Downloads

VITEK

DISCLAIMER:

■ Please read this instruction carefully for correct use of the product and keep it for reference purposes.

■ All the examples and pictures used here are for reference only.

■ There may be technically incorrect parts or printing errors in this manual. Updates will be added to new versions of this manual. The contents of this manual are subject to change without notice.

1. Interfaces and Parts

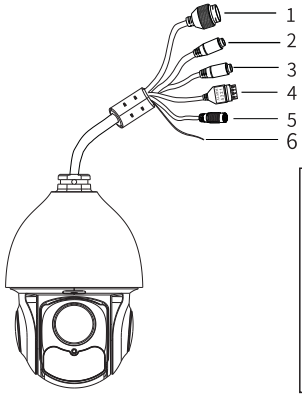

1 Ethernet Connector (PoE++)
2 MIC-Audio input (3.5mm)
3 HP-Audio output (3.5mm)
4 Alarm In/Alarm Out
5 24VDC Power Jack
6 Ground

2. Installation

☞ **Please make sure the wall is strong enough to bear the camera's weight. Please make sure the camera is powered off during installation.**

◆ Install SD Card

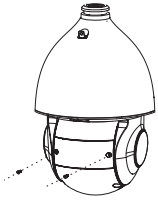

① Loosen the two screws of the dome.

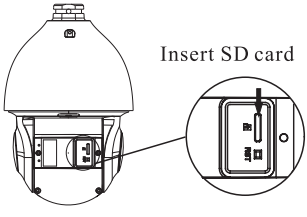

② Open the cover and insert SD card.

◆ Install the Speed Dome

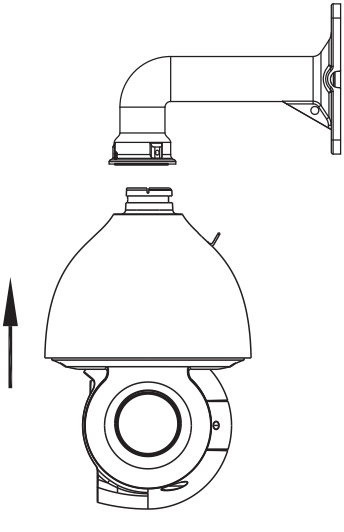

① Pull the cables through the bracket. Mount the speed dome to the bracket.

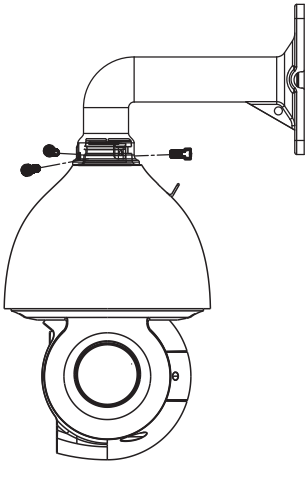

② Secure the speed dome to the bracket with the screws.

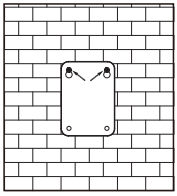

③ Drill the screw holes on the wall according to the drill template. Then insert the anchors into the holes.

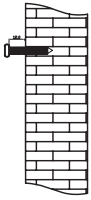

④ Drive the two screws to the holes indicated by the arrows (left) and leave 1/2" clearance.

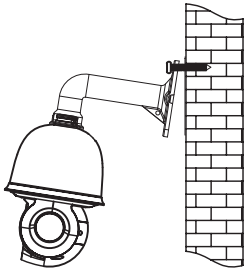

⑤ Connect the cables and then hang the bracket on the wall .

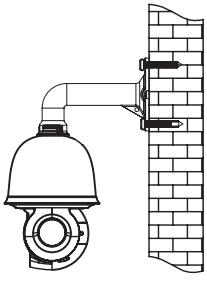

⑥ Attach the bracket to the wall with four screws.

3. Connections

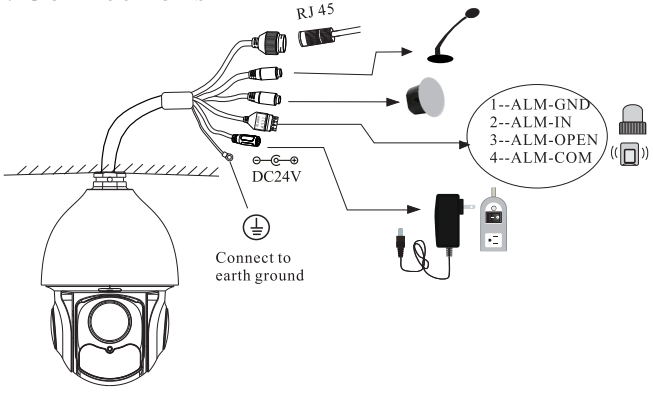

Alarm Connections

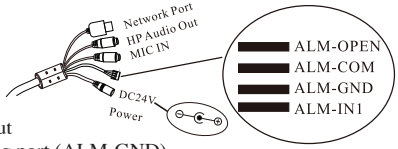

1. Alarm Input

a) There is one independent alarm input port (ALM-IN1), and one grounding port (ALM-GND).
b) Alarm input (NO type): Connect DC5V~DC12V voltage between the alarm input port (ALM-IN1) and the grounding port (ALM-GND).
c) Alarm input (NC type): DIsconnect the voltage between the alarm input port (ALM-IN1) and the grounding port (ALM-GND)

2. Alarm Output

a) Supports 1CH alarm output including OPEN, COM connecitons.
b) Alarm output: One passive switch for a user to connect alarm devices: the alarm output state will be on / off according to your users' setting.

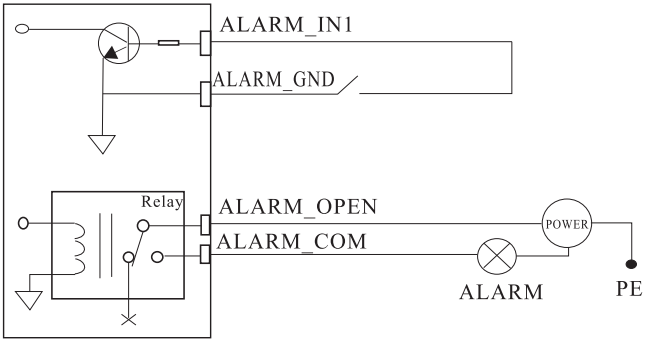

4. Edge in IE mode / IE Network Connections

In LAN, there are two ways to gain access. 1) Access through IP-Tool, 2) Directly Access through Edge in IE mode / IE browser.

● Access the camera through IP-Tool

① Make sure that the camera and the PC are properly connected to the LAN.

② Install IP Tool onto the PC and then run IP Tool.

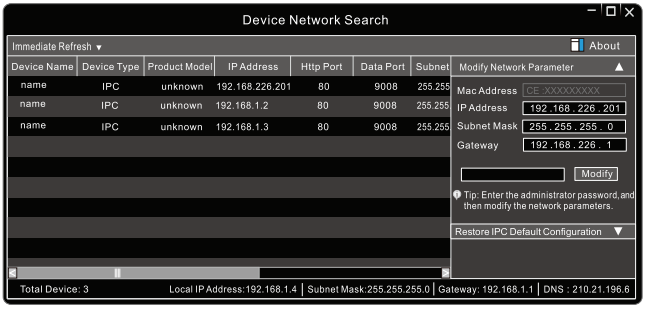

③ Modify the IP address. The default IP address of this camera is 192.168.226.201. Click the information of the camera listed in the above table to show the network information on the right side. Modify the IP address and gateway of the camera and make sure its network address is in the same local network segment as the computer's. Please modify the IP address of your device according to your actual situation.

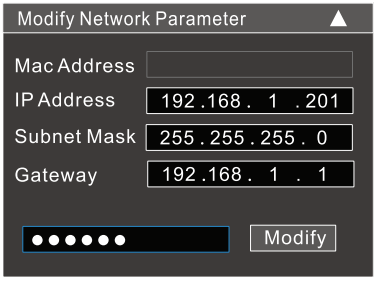

For example, if the IP address of your computer is 192.168.1.4 the IP address of the camera should be changed to 192.168.1.X. After modification, please input the password of the administrator and click the "Modify" button to modify the setting.

⚠ The default password of the administrator is "123456".

④ Double-click the IP address and then the system will pop up Edge in IE mode / IE browser to connect IP-CAM. Edge in IE mode / IE browser will auto-download the Active X control. After downloading, a login window will pop up:

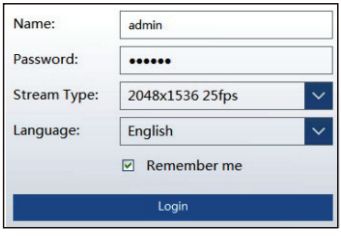

Input the user name and password to login.

⚠ The default username is ***admin***; the default password is ***123456***.

● Direct Access Through Edge in IE mode / IE

The default network settings are as shown below:

IP address: 192.168.226.201 HTTP:80

Subnet Mask: 255.255.255.0 Data Port:9008

Gateway: 192.168.226.1

You may use the above default settings when you log in the camera for the first time.

① Set the IP address of the PC and the network segment should be the same as the default settings of IP-CAM. Open the network and share center. Click "Local Area Connection" to pop up the following window. Select "Properties" and then select Internet protocol

according to the actual situation (for example: IPv4). Next, click "Properties" button to set the network of the PC.

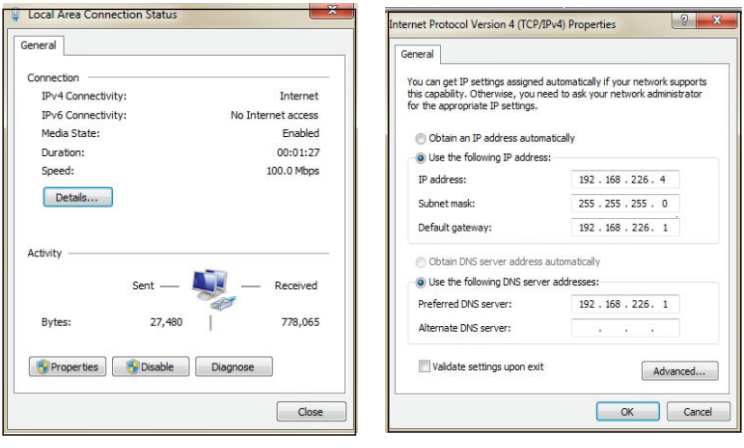

② Open the Edge in IE Mode / IE browser and input the default address of the IP-CAM and confirm. The Edge in IE Mode / IE browser will download the Active X control automatically.

③ After that, the login dialog box will pop up.

④ Input the default username and password and then enter to view.

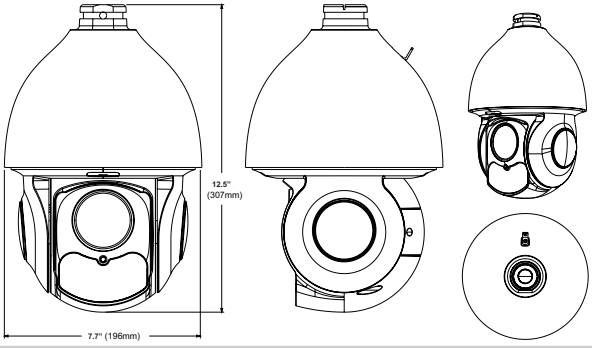

DETAILED SPECIFICATIONS

Image Sensor	1/2.8" Sony STARVIS® Progressive Scan Starlight CMOS Sensor
Resolution	8.0 MegaPixel (3840 × 2160) Resolution @ 30fps
Min. Illumination	Color: 0.01 Lux @ (F1.2 AGC On) B/W: 0.002 Lux @ (F1.2 AGC On), 0 Lux w/IR
Image setting	Flip, Mirror, Saturation, Brightness, Contrast, Sharpness, AGC, (Adjusted by Client)
Shutter Speed	60Hz: 1/30s - 1/30,000s, 50Hz: 1/25s - 1/25,000s
White Balance	Auto / Manual / Indoor / Outdoor
Day / Night	Auto / Manual + Schedule
Gain Control	Auto / Manual
Iris Control	Auto / Manual
SNR	≥52dB
DNR	XD-DNR (3D-DNR / 2D-DNR) - Auto/Manual
WDR	True WDR (120dB)
IR Range	Up to 656' IR Range (200M), Dual Stack 850nm IR Array
Smart IR	Yes
Image Enhancement	Backlight Compensation (BLC), Highlight Compensation (HLC)
Privacy Mask	4 Programmable Areas, Up to 8 Masks In the Same Frame
Overlay Features	Picture: Custom Logo on video [128×128px], 24bit BMP
On-Screen Display	Max 15 Character / Line, 8 Lines, White or Red Font
Lens / Focal Length	4.8~154mm Lens (32× Optical Zoom)
Zoom Speed	Approx. 4.6s (Optical Zoom, Wide Tele)
Field of View (FOV)	Horizontal: 61.3°~2.18° / Vertical: 36°.9~1.22° / Diagonal: 68.4°~2.5° (Wide-tele) **All listed speeds + / - 5%
Working Distance	Wide: 1.0m ~ INF, Tele: 1.5m ~ INF
Iris	F1.2 ~ F4.4 (wide-tele)
IR Cut type	Removable IR Cut filter
D.O.R.I. f=154mm (US)	**Detect** (8px/ft): 11575', **Observe** (19px/ft): 4593', **Recognize** (38px/ft): 2296', **Identify** (76px/ft): 1148'
D.O.R.I. f=154mm (Metric)	**Detect** (25px/M): 3528M, **Observe** (63px/M): 1400M, **Recognize** (125px/M): 700M, **Identify** (250px/M): 350M
D.O.R.I. f=4.8mm (US)	**Detect** (8px/ft): 453.5', **Observe** (19px/ft): 179.7', **Recognize** (38px/ft): 90.8', **Identify** (76px/ft): 45.4'
D.O.R.I. f=4.8mm (Metric)	**Detect** (25px/M): 138M, **Observe** (63px/M): 54.8M, **Recognize** (125px/M): 27.8M, **Identify** (250px/M): 13.8M
Pan Range / Speed	360° Endless, Configurable from .5°/s ~ 120°/s; Preset speed: 150°/s
Tilt Range / Speed	-5°~90° [Auto-Flip] / Configurable, from .5°/s ~ 120°/s; Preset speed: 150°/s
PTZ Features	Proportional Zoom, Pwr-Off Memory, 3D Position, PTZ Position Display
Preset / Cruise	360 / 8 Cruises, Up to 16 Presets for Each Cruise
Tracks	4 Tracks, Record Time Over 3 Minutes for Each Track
Scheduled Tasks	Preset / Cruise / Track / Random Scan / Boundary Scanning / Dome Reboot
Max Resolution	3840 × 2160

DETAILED SPECIFICATIONS CONT'D...

Main Stream	60Hz: 30fps:3840 × 2160,2560 × 1440,1920 × 1080,1280 × 960,1280 × 720 50Hz: 25fps: 3840 × 2160,2560 × 1440,1920 × 1080,1280 × 960,1280 × 720
Sub Stream	60Hz: 30fps (704 × 480, 640 × 480, 352 × 240) 50Hz: 25fps: (704 × 576, 640 × 480, 352 × 288)
Third Stream	60Hz: 30fps (1920 × 1080, 1280 × 960, 1280 × 720, 704 × 480, 640 × 480, 352 × 240) 50Hz: 25fps (1920 × 1080, 1280 × 960, 1280 × 720, 704 × 576, 640 × 480, 352 × 288)
Video Compression	H.265+/H.265/H.264+/H.264/MJPEG
Compression Standards	H.265: HEVC Codec MP, Level 5.0, H.264: AVC codec BP/MP/HP, Level 5.1
Video Bit Rate	64Kbps to 16Mbps
Audio Compression / Bit Rate	G.711A/U / 64Kbps
Deep Learning Engine	Supports Face Recognition (FR) up to 15 Human Faces / Sec (max), Human/Vehicle Detection
Smart Auto Tracking	Auto Tracking (supports tracking specified target types such as human and vehicle), Manual Tracking
Basic Event Detection	Motion detection, Video Tampering, Exception (Network Disconnected, IP Address Conflict, SD Card Full / Error)
Smart Event Detection	Trip Wire (+ Bi-Directional), Intrusion / Line Crossing / Region Entering + Exiting, Support Alarm Triggering by Specified Target Types (Human / Vehicle), Un-attended Baggage, Object Removal, Auto / Manual Smart Tracking
Gen. IV Advanced Analytics	Face Detection (15 Faces Simultaneously), Detect, Track, Capture + Vehicle / Non Vehicle Detection & Tracking
Protocols	HTTP, HTTPS, IPv4/IPv6, 802.1x, QoS, FTP, SMTP, UPnP, SNMP, DNS, DDNS, NTP, RTSP, RTCP, RTP, TCP/IP, UDP, DHCP, PPPoE
Audio Interface	1 Audio Input (MIC in), 1 Audio Output, Line Level, Impedance, 600Ω*
Alarm Interface	1 Alarm Input (Dry Contact); 1 Alarm Output
Alarm Linkage	Alarm Actions, Including Preset, Cruise, Track, Memory Card Video Record, Trigger Recording, Upload to FTP/Memory, Card, Send Email
Reset Button	Yes
Live View Connections	Up to 6 Simultaneous Live View Connections
User/Host	Up to 16 users, 3 levels: Administrator, Advanced and Normal Users
Security Measures	User Authentication (ID and PW), Host authentication (MAC address); HTTPS encryption., IEEE802.1x port-based net account control; IP address filtering
Web Browser	Internet Explorer (IE) - Plug-in Required, Edge in IE Mode
Network Interface	1 RJ45 10M/100M Adaptive Ethernet, Support PoE++(802.3.bt)
API	ONVIF, Third-Party Integration
CVBS (BNC), RS485	NA
On-Board Storage	Built-in microSD/SDHC/SDXC card slot, up to 256GB
Thermal Management	Internal Heater and Fan, Hot Air Blows on Glass to Remove Frost, Ice, Remove Water-Droplets w/ Quick Spinning
Lens Wiper	NA
Working Environment	40°F ~ 149°F (-40°C ~ 65°C), Cold start at -22°F (30°C) (0.5 Hour Warm-up Time), ≤90%RH Non-condensing
Weather Rating / Protection	IP66, 6000V (Lightning, Surge, and Voltage Transient Protection)
Impact Protection	IK10 (Excluding Glass Window)
Power	DC24V/24VAC** @ 2.5amps, PoE++ (34W with IR on and PTZ Working)
Dimensions and Weight	7.7" × 12.5" (196mm × 307mm), 8.31lb (3.7kg)

Power Supply Included, PoE Injector Required for PoE Power - see next page

Please research local, state and federal laws regarding the implementation of audio surveillance SONY™ is an independent and wholly owned corporation and has not tested or verified this product's compatibility with this sensor.

OPTIONAL ACCESSORIES FOR VT-TPTZ32HRAN-8PNS

VT-POE60 / VT-POE95
MidSpan PoE Injectors
(sold separately)



VT-TPT23HR-WM
Univeral Wall Mount for Transcendent IP PTZ Cameras including VT-TPTZ232RAN-8PNS





VT-TPT20HR-PM



VT-TPLMT



VT-TCNMT



**Both VT-TPLMT and VT-TCNMT Req. VT-TPT23HR-WM*



Pendent/Ceiling Mount
VT-TP20HR-PM



Universal
Pole Mount Adapter
VT-TPLMT



Universal
Corner Mount Adapter
VT-TCNMT

LIMITED PRODUCT WARRANTY

VITEK products carry a three (3) year limited warranty. VITEK warrants to the purchaser that products manufactured by VITEK are free of any rightful claim of infringement or the like, and when used in the manner intended, will be free of defects in materials and workmanship for a period of three (3) years, or as otherwise stated above, from the date of purchase by the end user. This warranty is nontransferable and extends only to the original buyer or end user customer of a VITEK Authorized Reseller.

The product must have been used only for its intended purpose, and not been subjected to damage by misuse, willful or accidental damage, caused by excessive voltage or lightning.

The product must not have been tampered with in any way or the guarantee will be considered null and void.

This guarantee does not affect your statutory rights.

Contact your local VITEK Reseller should servicing become necessary.

CLASS A DIGITAL DEVICE (INDUSTRIAL & COMMERCIAL ENVIRONMENT)
This equipment has been tested and found to comply with the limits for a Class A digital device, pursuant to CE and FCC Rules. These limits are designed to provide reasonable protection against harmful interference when the equipment is operated in a commercial environment. This equipment generates, uses and can radiate radio frequency energy and, if not installed and used in accordance with the instruction manual, may cause harmful interference to radio communications. Operation of this equipment in a residential area is likely to cause harmful interference in which case the user will be required to correct

VITEK®
INDUSTRIAL VIDEO PRODUCTS, INC.
28492 CONSTELLATION ROAD VALENCIA, CA 91355
WWW.VITEKCCTV.COM

Version 1.0
Oct. 2022