IQ Lock-PGP Installation and User Guide

IQ Lock-PGP

IQDLK-PGOK-SN / IQDLK-PGOK-MB / IQDLK-PGOK-ORB

29011430R002 2026-09-17

D-309633 Rev. 01

D-309633

© 2026 Johnson Controls. All rights reserved.

Safety information

Read the safety information before you install the equipment. This equipment must be installed only by a skilled person. A skilled person is an installer with appropriate technical training. The installer must be aware of potential hazards during installation and measures available to minimize risks to the installer and other people.

Warnings

- Protect your user codes.
- Restrict access to your lock and routinely check your settings to ensure they are not altered without your knowledge.
- To make sure you are not locked out of your premises, monitor the smart lock batteries level and replace them when required.
- Ensure you have access to the physical keys.
- Always replace all batteries as a complete set, and avoid mixing different models or brands to maintain optimal performance and prevent issues. Use brand-new batteries for replacement to ensure accurate battery level reporting and proper lock functionality.
- Avoid installing or operating the device near strong magnetic field as it could affect the device functionality.
- Practice safety during installation, wear appropriate PPE (Personal Protective Equipment), and wash your hands if you have contact with the product during installation.

Cleaning the IQ Lock-PGP

To clean the IQ Lock-PGP, use a soft damp cloth.

WARNING: Do not use lacquer thinner, caustic soaps, abrasive cleaners, or polishes.

Introduction

Note: This guide covers the following certified models: IQDLK-PGOK-SN, IQDLK-PGOK-MB and QDLK-PGOK-ORB. The generic reference IQ Lock-PGP used throughout this guide covers all these three models unless stated differently.

The IQ Lock-PGP is a battery operated smart lock device that communicates with a compatible panel. The system is composed of the IQ Lock-PGP hardware, and the panel. The panel monitors and reports the IQ Lock-PGP status.

Access the most recent online version of the IQ Lock-PGP installation and user guide at the following link.

Accédez à la version en ligne la plus récente du guide d'installation et d'utilisation IQ Lock-PGP au lien suivant.

Acceda a la versión en línea más reciente de la guía de usuario e instalación de IQ Lock-PGP en el siguiente enlace.

https://iqsecurityproducts.com/iq-lock-pgp/

You can also scan the following QR code to access the most recent online version of the installation and user guide.

Vous pouvez également scanner le code QR suivant pour accéder à la version en ligne la plus récente du guide d'installation et d'utilisation.

También puede escanear el siguiente código QR para acceder a la versión en línea más reciente de la guía de instalación y del usuario.

© 2026 Johnson Controls. All rights reserved.

Compatible panels

For panels that are compatible with the IQ Lock-PGP, access https://iqsecurityproducts.com/iq-lock-pgp/.

IQ Lock-PGP kit details

Before you install the smart lock, ensure the kit contains the items shown in Figure 1.

Figure 1: Smart lock kit

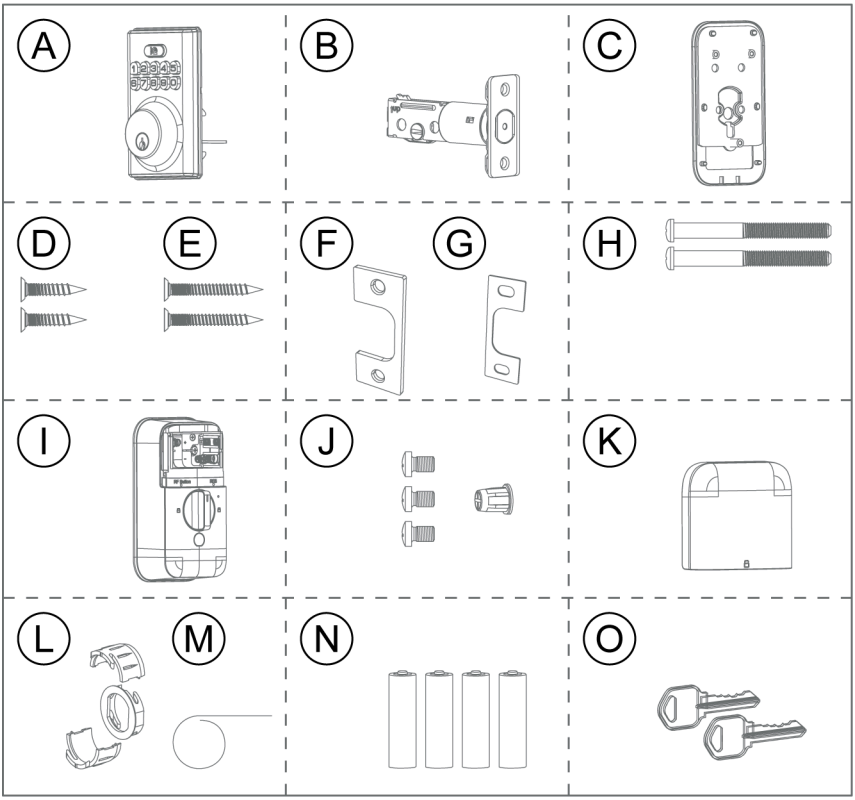

Callout	Component	Quantity
A	Exterior assembly	1
B	Latch	1
C	Mounting plate	1
D	Latch screws: 21 mm wood screws	2
E	Strike plate screws: 38 mm wood screws	2
F	Fixed strike plate	1
G	Adjustable strike plate	1
H	Mounting plate screws for door thicknesses between 1 3/8 in. and 2 1/4 in. (between 35 mm and 58 mm): 1/4-28 UNF x 65 mm	2
I	Interior assembly	1

© 2026 Johnson Controls. All rights reserved.

Callout	Component	Quantity
J	Interior assembly screws: M4 x 6 mm	3
	Screw cap	1
K	Battery cover	1
L	Drive-in collar	1
M	Tool for reset and RF setup	1
N	AA alkaline batteries	4
O	Physical keys	2

Specifications

Wireless communication protocol	Selectable PowerG+ or Z-Wave (LR)
Power supply	Four AA alkaline batteries
Operating voltage	4.6 V to 6.0 V
Battery life with ten unlocking and locking cycles for each day, including six cycles through smart lock keypad, and four cycles through network	PowerG mode: Minimum 14 months Z-Wave mode: Minimum 12 months
Operating temperature	Exterior assembly: -31°F to 151°F (-35°C to 66°C) Interior assembly: 32°F to 140°F (0°C to 60°C)
Operating humidity	Exterior assembly: 100%, condensing Interior assembly: 20% to 95%, non-condensing
Storage temperature	32°F to 120°F (0°C to 49°C)
Storage humidity	20% to 60%
IP rating	Exterior assembly: IP54
Dimensions	See Smart lock dimensions
Weight (without batteries)	Exterior assembly: 1.3 lb (0.61 kg) Interior assembly: 1.0 lb (0.47 kg)

Smart lock dimensions

The following image outlines the smart lock dimensions.

© 2026 Johnson Controls. All rights reserved.

Figure 2: Smart lock dimensions

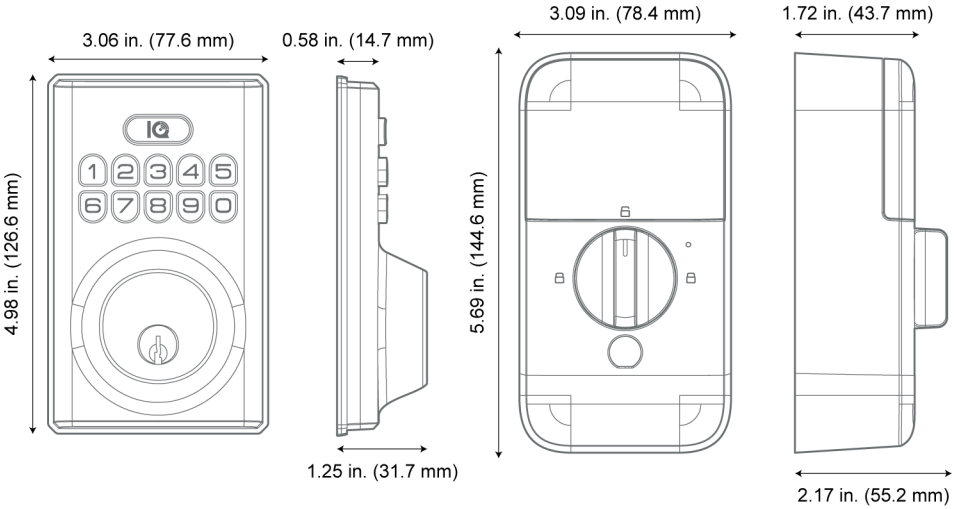

Prerequisites

Before you install the smart lock, ensure you meet requirements in Figure 3.

CAUTION: Do not over-screw when using electronic screwdriver or it may cause the worn-out of screw threads and the installation cannot be completed correctly.

Figure 3: Prerequisite check list

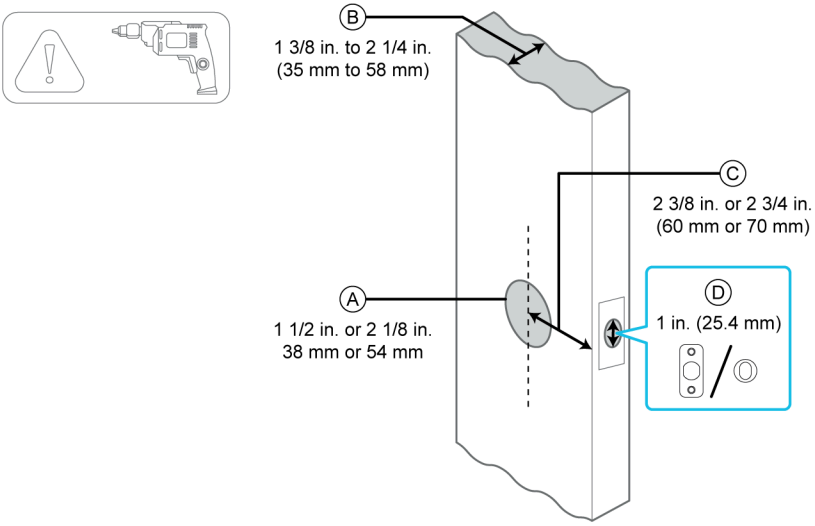

© 2026 Johnson Controls. All rights reserved.

Callout	Prerequisite
A	Door hole is 1 1/2 in. or 2 1/8 in. (38 mm or 54 mm)
B	Door thickness is between 1 3/8 in. and 2 1/4 in. (35 mm to 58 mm)
C	Door hole backset is 2 3/8 in. or 2 3/4 in. (60 mm or 70 mm)
D	Latch hole is 1 in. (25.4 mm) diameter

Note: Make sure the door frame is aligned with the door, and there are no obstructions stuck in the door frame.

Installing the smart lock

Figure 4 outlines how to install the smart lock components.

Note: To install the smart lock you need a Philips head screwdriver, a flat head screwdriver, and a hammer.

Figure 4: Smart lock installation overview

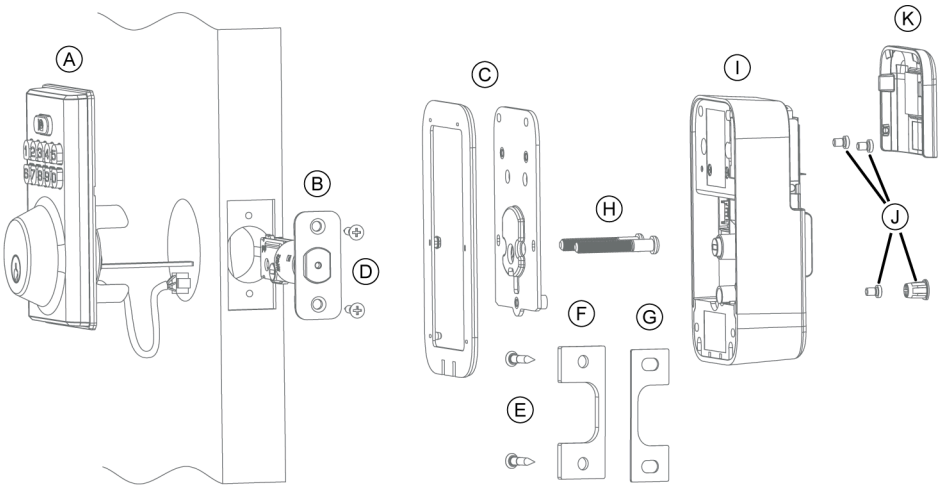

Callout	Component
A	Exterior assembly
B	Latch
C	Mounting plate and rubber gasket
D	Latch screws: 21 mm wood screws
E	Strike plate screws: 38 mm wood screws
F	Fixed strike plate
G	Adjustable strike plate
H	Mounting plate screws: 1/4-28 UNF x 65 mm
I	Interior assembly
J	Interior assembly screws (M4 x 6 mm), and screw cap
K	Battery cover

© 2026 Johnson Controls. All rights reserved.

Adjusting the latch

1. Hold the latch in front of the door hole, with the latch face flush against the door edge.

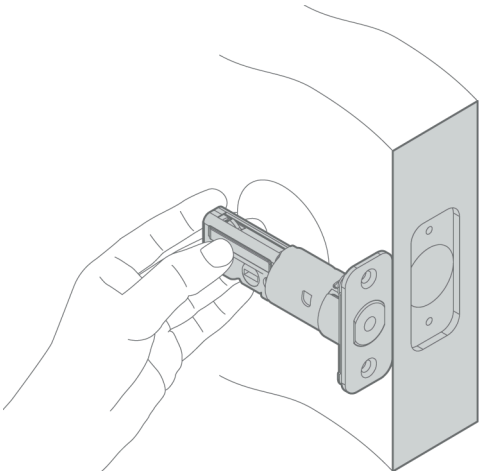

a. If the slotted hole is centered in the door hole, no adjustment is required.

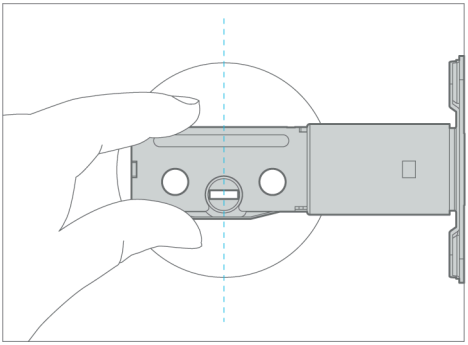

b. If the slotted hole is not centered in the door hole, you need to make adjustments.

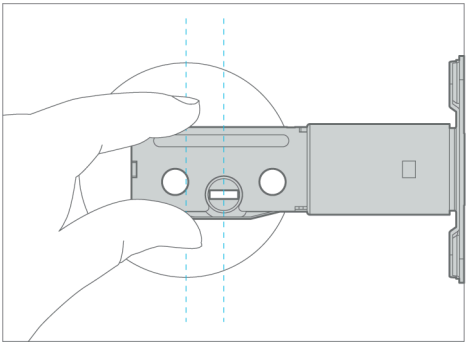

2. Rotate and pull the latch to extend the latch. Adjust so that the slotted hole is centered.

© 2026 Johnson Controls. All rights reserved.

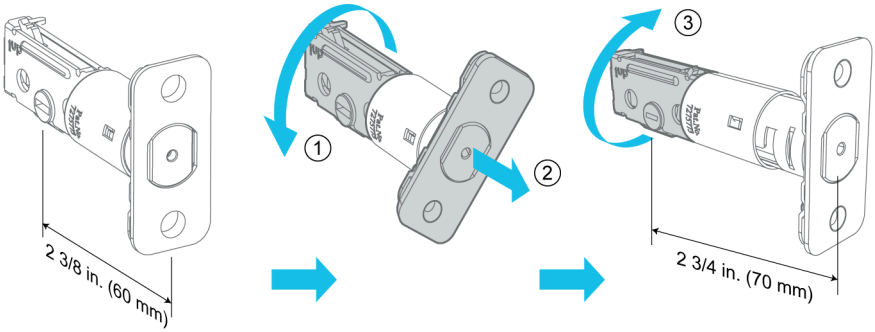

Choosing the latch faceplate

The smart lock latch has a rectangular faceplate in place as the default faceplate. A round drive-in collar is included in the kit if it is required.

1. Check the door latch hole to establish if the round drive-in collar is required:

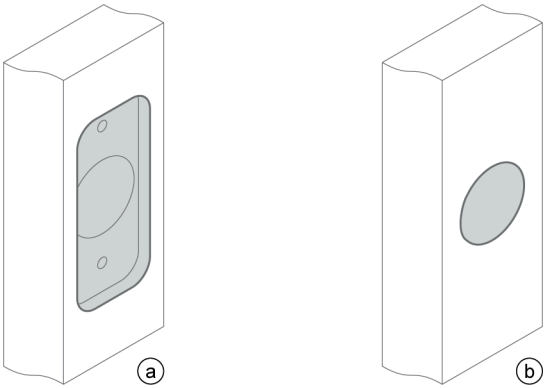

   a. If the door latch hole is chiseled, no changes are required.
   b. If the door latch hole is not chiseled, you need to install the round drive-in collar.

2. Remove the rectangular faceplate from the latch with a flat head screwdriver wedged between the faceplate and the faceplate clip.

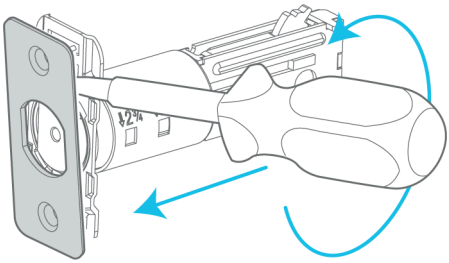

3. Remove the rectangular faceplate clip: rotate it counterclockwise and pull.

© 2026 Johnson Controls. All rights reserved.

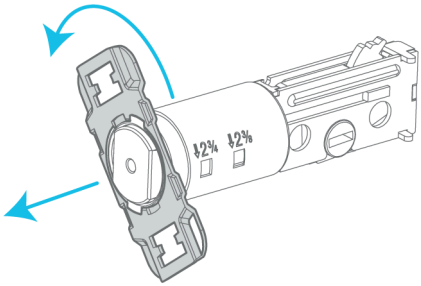

4. Attach the drive-in collar.

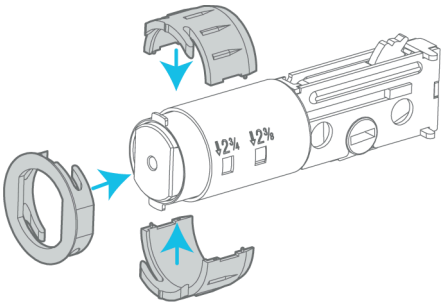

Mounting the latch

Before you begin:

Make sure the latch is an unlocked position and the torque blade hole is in the horizontal orientation.

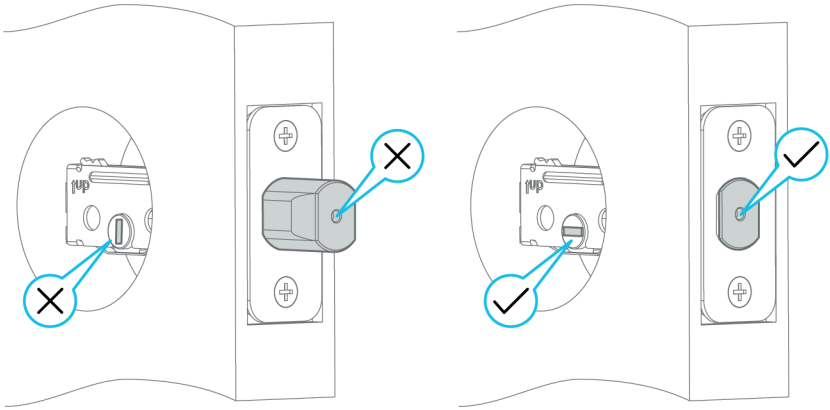

1. Insert the latch into the latch hole: make sure to install the latch according to the **UP** mark on the latch.

© 2026 Johnson Controls. All rights reserved.

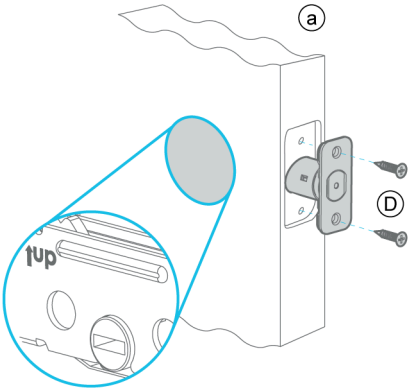

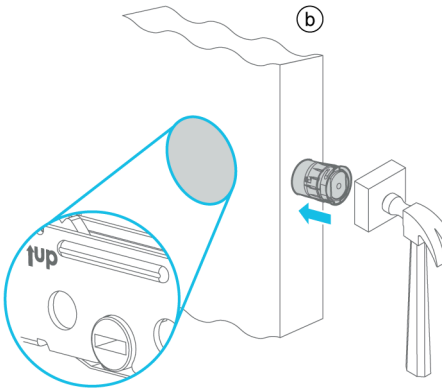

a. If you insert the latch in a chiseled hole, secure the latch with the latch screws D, using a Philips head screwdriver.
b. If you insert the latch in a not chiseled hole, place a piece of cardboard or a cloth over the latch before striking with a hammer.

2. Use a screwdriver to test if the deadbolt works smoothly.

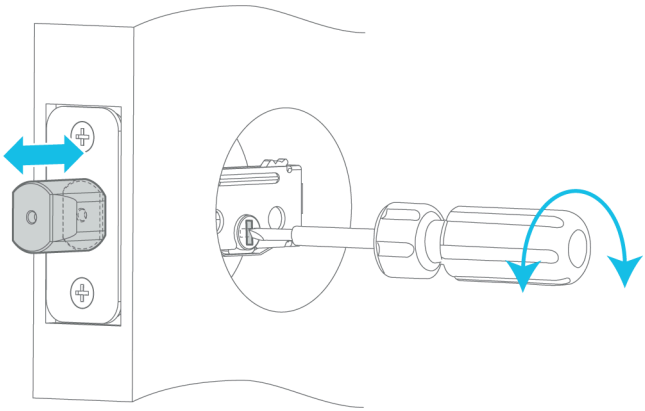

Mounting the strike plate

Important: Ensure the hole in the door frame is drilled to a minimum of 1 in. (25 mm) deep.

1. Remove the old strike plate.
2. Place the new adjustable strike plate **G** where the old plate was and align the fixed strike plate **F** over the top of existing screws holes.
3. Move the adjustable strike plate **G** in order to adjust the location of the hole for your deadbolt.

   By aligning the strike plates the smart lock is able to lock correctly.
4. When you have the strike plate where you want it, secure it on the door frame with the strike plate screws E.
5. Test the strike plate position by closing the door and turning the thumb turn on the smart lock.

   If the smart lock is able to lock smoothly then the adjustment was successful.

   If the lock catches open the door and loosen the screws in strike plate to make further adjustments.

© 2026 Johnson Controls. All rights reserved.

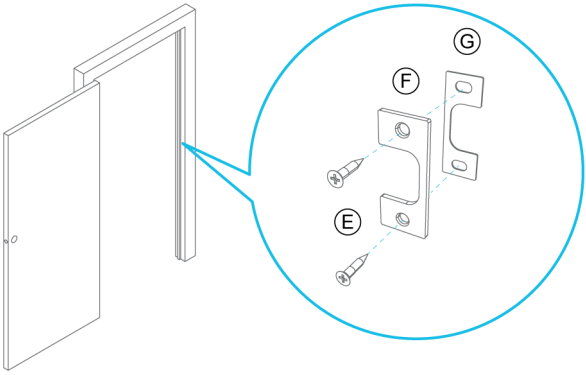

Installing the exterior assembly

Use the following steps to install the exterior assembly.

Before you begin:

- If the door hole measures 1 1/2 in. (38 mm), remove the fire cup.

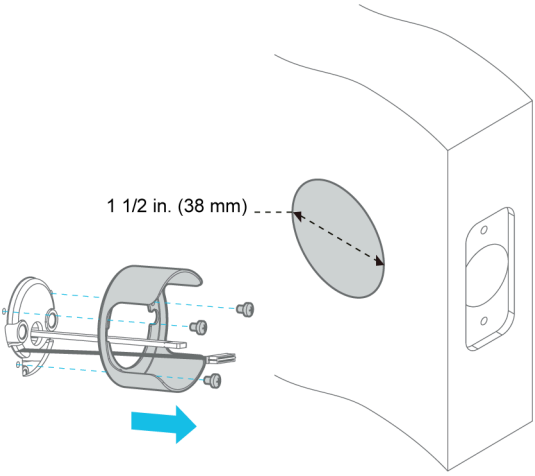

- Make sure the latch is in the unlocked position.

© 2026 Johnson Controls. All rights reserved.

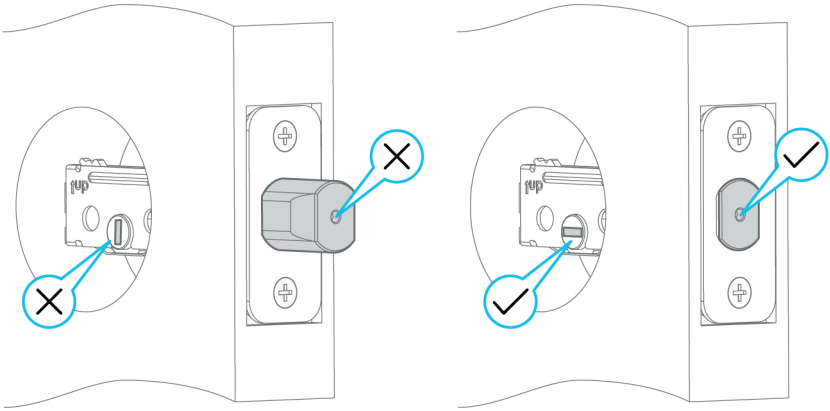

1. Route the cable below the latch.

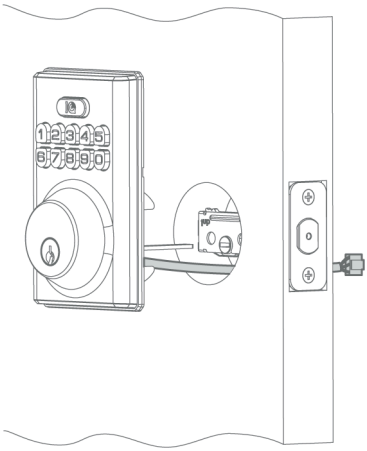

2. Insert the torque blade into the slotted hole on the latch.

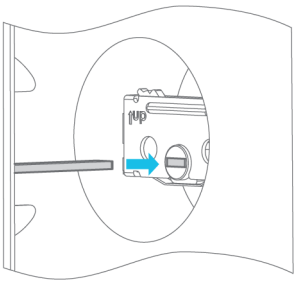

3. Route the cable through the hole in the mounting plate.

© 2026 Johnson Controls. All rights reserved.

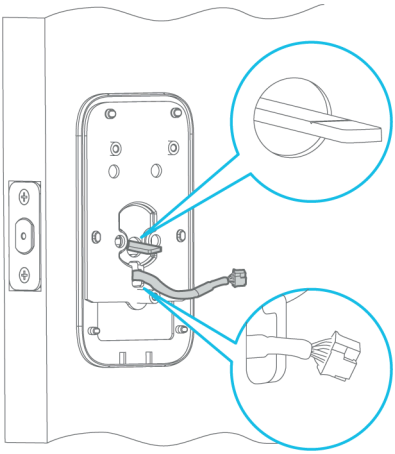

4. Secure the mounting plate to the exterior assembly with the mounting plate screws H.

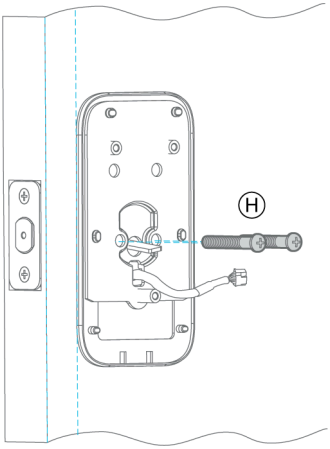

Note: Do not overtighten the screws.

Note: Keep the mounting plate parallel to door edge.

Installing the interior assembly

Use the following steps to install the interior assembly.

Important: Do not insert the batteries until the lock is completely installed. Do not let the interior assembly hang while attached to the cable.

1. Remove the battery cover.

© 2026 Johnson Controls. All rights reserved.

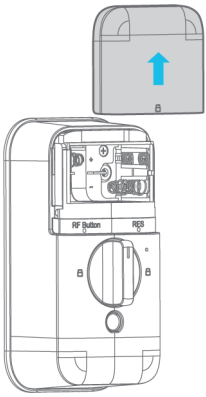

2. Connect the cable and ensure it is connected tightly.

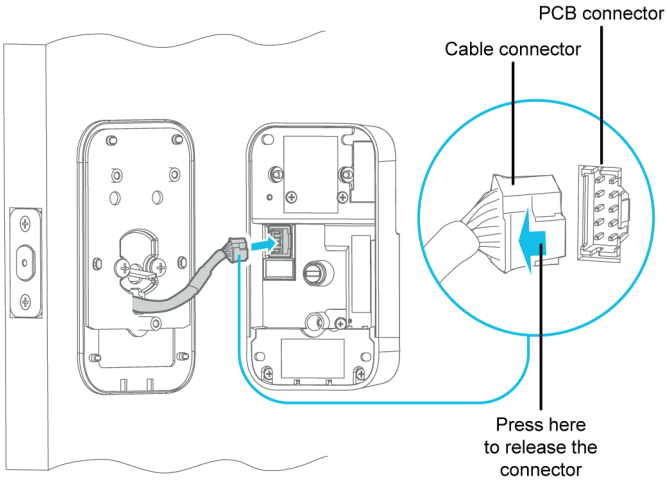

If you want to remove the cable, press the top of the white connector and pull the cable out carefully.

3. Keep the thumb turn in the vertical position, and attach the interior assembly to the mounting plate.

© 2026 Johnson Controls. All rights reserved.

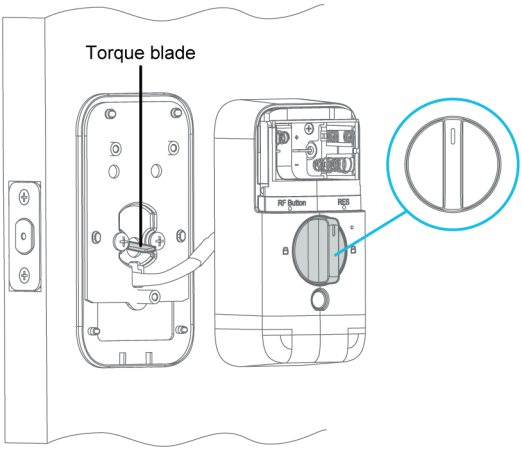

4. Test the lock by rotating the thumb turn to make sure the bolt can extend and retract smoothly.

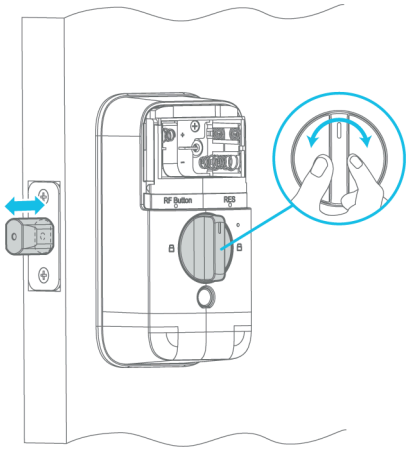

5. Secure the interior assembly to the mounting plate using the interior assembly screws J, and insert the screw cup.

© 2026 Johnson Controls. All rights reserved.

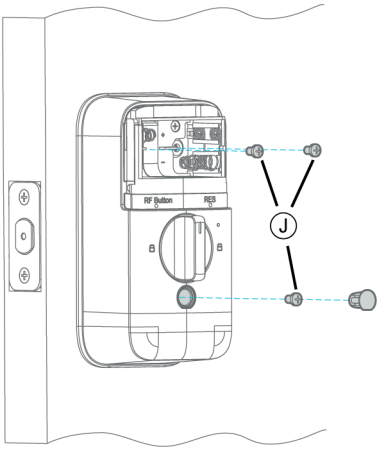

Setting left or right door orientation

Complete the following steps to ensure the lock functions correctly after you install it.

1. With the thumb turn in the vertical unlocked position, insert four AA batteries.

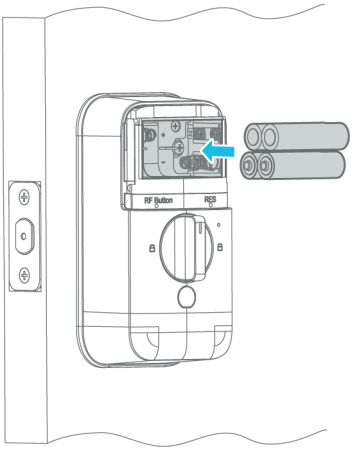

Important:

Always replace all batteries as a complete set, and avoid mixing different models or brands to maintain optimal performance and prevent issues. Use brand-new batteries for replacement to ensure accurate battery level reporting and proper lock functionality.

Note: Make sure to put the ribbon under the batteries: this helps to pull the batteries out when required.

The latch bolt extends on its own lo learn the hanging orientation of the door.

© 2026 Johnson Controls. All rights reserved.

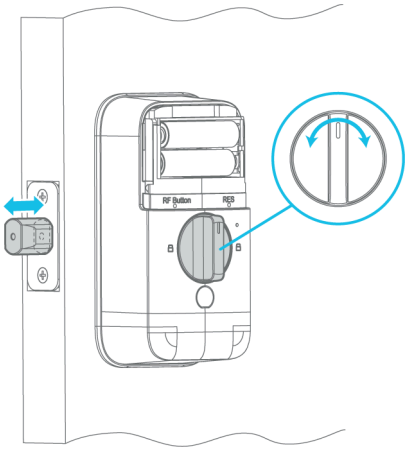

2. If the latch bolt does not extend as part of auto-orientation, use the tool **M** to long press the **RES** button, until you hear a beep.

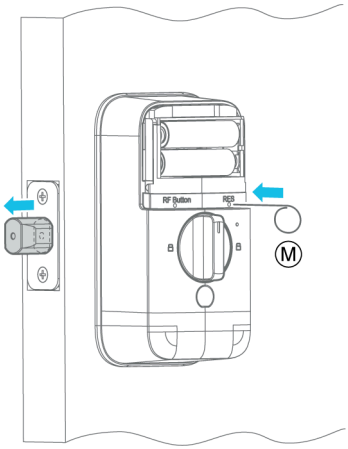

If the reset is successful, the latch bolt extends.

3. Replace the battery cover.

Smart lock overview

Figure 5 shows the smart lock overview.

© 2026 Johnson Controls. All rights reserved.

Figure 5: Smart lock overview

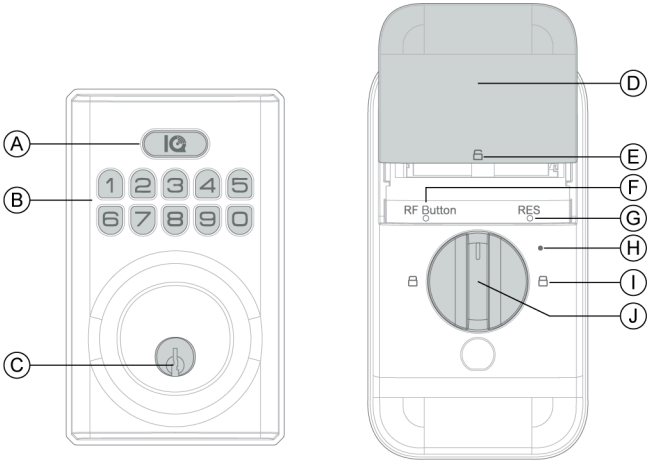

Callout	Description
A	IQ logo key and LED
B	Digit keys
C	Keyhole
D	Battery compartment cover
E	Thumb turn unlock position
F	RF protocol button (**RF**), under the battery compartment cover
G	Reset button (**RES**), under the battery compartment cover
H	LED indicator
I	Thumb turn lock position
J	Thumb turn

The smart lock can operate in two modes.

- **The stand-alone mode:** in the stand-alone mode you can lock and unlock the smart lock locally only. The smart lock operates the stand-alone mode when it is not enrolled to panels.
- **The network mode:** in the network mode you can lock and unlock the smart lock locally, and remotely, using compatible panels, and supported cloud services. You need to enroll the smart lock on the panel to operate the network mode.

  Note: When network mode setup complete successfully, the smart lock disables the stand-alone mode, and deletes all the stand-alone user codes.

For updated list of compatible panels, and supported cloud services, access https://iqsecurityproducts.com/iq-lock-pgp/.

Note: When you power on the smart lock the first time, and when you reset the smart lock, it operates in stand-alone mode.

For more information, see:

- Setting up stand-alone mode
- Setting up network mode

© 2026 Johnson Controls. All rights reserved.

LEDs and buzzer behavior

The smart lock is equipped with LED and buzzer to indicate its status, and provide feedback on the operations.

This guide uses the definitions of LED and buzzer behavior described in Table 1 and Table 2.

Table 1: LED behavior

Behavior	Description
Very fast blink	Blink of 0.1 seconds approx.
Fast blink	Blink of 0.25 seconds
Blink	Blink of 0.5 seconds
Long blink	Blink of 2 seconds

Table 2: Buzzer behavior

Behavior	Description
Very short beep	Beep of 0.1 seconds approx.
Short beep	Beep of 0.25 seconds
Beep	Beep of 0.5 seconds
Long beep	Beep of 2 seconds

Note: You can disable the buzzer through the **Doorlock Volume** PowerG option, or the **Set the volume to silent** Z-wave option: for more information, see Configuring the PowerG options and Configuring the Z-Wave options.

Button operation

The smart lock is equipped with buttons to perform operations.

This guide uses the definitions of button operation described in Table 3.

Table 3: Button operation

Behavior	Description
Short press	Press the button for less than one second
Long press	Press the button for more than five seconds

Setting up stand-alone mode

In the stand-alone mode you can lock and unlock the smart lock locally only. The smart lock operates the stand-alone mode when it is not enrolled to panels.

Note: When you power on the smart lock the first time, and when you reset the smart lock, it operates in stand-alone mode.

Setting up the stand-alone mode consist of the following operations:

- Changing master user code
- Adding user code
- Deleting user code

Changing master user code

Before you begin:

- Ensure the smart lock is not enrolled to a panel.
- Ensure the smart lock is unlocked.

© 2026 Johnson Controls. All rights reserved.

The smart lock has one master user code that allows the following operations:

- Adding and deleting stand-alone user codes
- Unlocking the smart lock

The default master user code is 12345678.

Note: You must change the default master user code before you can perform any other operation.

The master user code must fit the following requisites:

- The master user code must have from four to ten digits
- The first four digits of master user code must be unique
- You cannot set 12345678 as master user code

To change the master user code from the standby status, complete the following steps.

Note: Unless otherwise stated, the following procedure adopts the below conventions to signal success and fail of a step.

- **Success:** Two green fast blinks of the **IQ logo** LED. Two short beeps of the buzzer.
- **Fail:** Two red fast blinks of the **IQ logo** LED. Two short beeps of the buzzer.

1. Press the **IQ logo** key twice.
   Fail causes: The smart lock is locked
   Next step for fail: Unlock the smart lock and repeat the step
2. Enter the master user code, and then press the **IQ logo** key.
   Fail causes: Invalid user code
   Next step for fail: Enter a valid user code
3. Press key **1**.
   Fail causes: Invalid key
   Next step for fail: Press a valid key
4. Enter the new code, and then press the **IQ logo** key.
   Fail causes: Invalid user code; Duplicate code; No code entry
   Next step for fail: Returns to the standby status
5. Enter the new code again, and then press the **IQ logo** key.
   Fail causes: Code mismatch; No code entry
   Next step for fail: Enter the new code again

Adding user code

Before you begin:

- Ensure that you changed the default master user code: for more information, see Changing master user code.
- Ensure the smart lock is not enrolled to a panel.
- Ensure the smart lock is unlocked.

You can add up to five stand-alone user codes that can be used in stand-alone mode only, in addition to the master user code. The user codes allow the following operations:

- Unlocking the smart lock

The user codes must fit the following requisites:

- The user code must have from four to ten digits
- The first four digits of each user code must be unique
- You cannot set 12345678 as user code

Note: The smart lock deletes the stand-alone user codes when it is enrolled on an IQ panel.

To add the user code from the standby status, complete the following steps.

© 2026 Johnson Controls. All rights reserved.

Note: Unless otherwise stated, the following procedure adopts the below conventions to signal success and fail of a step.

- **Success:** Two green fast blinks of the **IQ logo** LED. Two short beeps of the buzzer.
- **Fail:** Two red fast blinks of the **IQ logo** LED. Two short beeps of the buzzer.

1. Press the **IQ logo** key twice.
   Fail causes: The smart lock is locked
   Next step for fail: Unlock the smart lock and repeat the step
2. Enter the master user code, and then press the **IQ logo** key.
   Fail causes: Invalid user code
   Next step for fail: Enter a valid master user code
3. Press key **2**.
   Fail causes: Invalid key; No available user code slots
   Next step for fail: Press a valid key
4. Enter the new code, and then press the **IQ logo** key.
   Fail causes: Invalid user code; Duplicate code; No code entry
   Next step for fail: Returns to the standby status
5. Enter the new code again, and then press the **IQ logo** key.
   Fail causes: Code mismatch; No code entry
   Next step for fail: Enter the new code again

Deleting user code

Before you begin:

- Ensure the smart lock is not enrolled to a panel.
- Ensure the smart lock is unlocked.

To delete the user code from the standby status, complete the following steps.

Note: Unless otherwise stated, the following procedure adopts the below conventions to signal success and fail of a step.

- **Success:** Two green fast blinks of the **IQ logo** LED. Two short beeps of the buzzer.
- **Fail:** Two red fast blinks of the **IQ logo** LED. Two short beeps of the buzzer.

1. Press the **IQ logo** key twice.
   Fail causes: The smart lock is locked
   Next step for fail: Unlock the smart lock and repeat the step
2. Enter the master user code, and then press the **IQ logo** key.
   Fail causes: Invalid user code
   Next step for fail: Enter a valid user code
3. Press key **3**.
   Fail causes: Invalid key; No user codes
   Next step for fail: Press a valid key
4. Enter the code to be deleted, and then press the **IQ logo** key.
   Fail causes: Invalid user code; Incorrect user code; No code entry
   Next step for fail: Returns to the standby status
5. Enter the code to be deleted again, and then press the **IQ logo** key.
   Fail causes: Code mismatch; No code entry
   Next step for fail: Enter the code to be deleted again

Fail causes

Table 4 shows the failures that can occur when setting user codes in standalone mode.

© 2026 Johnson Controls. All rights reserved.

Table 4: Fail causes

	Fail	Description
	Invalid user code	• The user code must have from four to ten digits • The first four digits of each user code must be unique • You cannot set 12345678 as user code, and master user code
	Duplicate code	You entered a user code already in the smart lock memory, or first four digits of the user code you entered are not unique.
	No code entry	You entered no user code before pressing the confirmation key.
	Code mismatch	The second user code entry does not match with the first entry.
	No available user code slots	The smart lock memory is full. When the smart lock is in stand-alone mode, it can memorize up to five user codes, and one master user code.
	No user codes	No user codes in the smart lock memory.
	Incorrect user code	Entered user code does not exist in the smart lock memory.
	Invalid key	You can press keys 1, 2, and 3 only: • If you have not yet changed the default master user code, you can press key 1 only • If there are no user codes in the smart lock memory, you can press keys 1 and 2 only

Setting up network mode

In the network mode you can lock and unlock the smart lock locally, and remotely, using compatible panels, and supported cloud services. You need to enroll the smart lock to a compatible panel to operate the network mode.

For updated list of compatible panels, and supported cloud services, access https://iqsecurityproducts.com/iq-lock-pgp/.

When network mode setup complete successfully, the smart lock disables the stand-alone mode, and deletes all the stand-alone user codes.

If the smart lock disconnects from the panel, existing user codes remain functional, and the smart lock continues to operate in network mode.

If you delete the smart lock from the panel without performing factory reset, existing user codes remain functional: you can still lock and unlock the smart lock using the user codes that you set up in network mode.

To delete existing user codes, you must reset the smart lock to factory default settings: at that point, the smart lock has just the default master user code in its memory. For more information, see Resetting the factory default settings.

The smart lock supports the PowerG and Z-Wave RF protocols for network enrolling.

At default the PowerG RF protocol is set on the smart lock.

To check the smart lock RF protocol, see Checking RF protocol.

To set up the PowerG network mode, see Setting up PowerG network mode.

To set up the Z-Wave network mode, see Setting up Z-Wave network mode.

Checking RF protocol

PowerG is the default RF protocol.

To check the set RF protocol, complete the following steps.

- Short press the RF button.

© 2026 Johnson Controls. All rights reserved.

Note: Do not press the RF button for more than three seconds, otherwise you change the RF protocol.

The LED indicator displays the RF protocol as follows.

LED indicator behavior	Description
One yellow blink + one green blink	Stand-alone mode and PowerG protocol
One yellow blink + one red blink	Stand-alone mode and Z-Wave protocol
One green blink + one green blink	Network mode and PowerG protocol
One green blink + one red blink	Network mode and Z-Wave protocol
One red blink + one green blink	Stand-alone and Network modes disabled, and PowerG protocol
One red blink + one red blink	Stand-alone and Network modes disabled, and Z-Wave protocol

Fail: Two red fast blinks of the **IQ logo** LED. Two short beeps of the buzzer.

Next step for fail: Repeat the step.

For more information, see:

- Switching to Z-Wave protocol
- Switching to PowerG protocol

Setting up PowerG network mode

Setting up the PowerG network mode consists of the following main steps

1. Checking the current RF protocol: for more information, see Checking RF protocol.
2. If Z-Wave is the current RF protocol, switch to the PowerG RF protocol: for more information, see Switching to PowerG protocol.
3. Enrolling the smart lock on the panel: form more information, see Enrolling IQ Lock-PGP with Auto Learn Devices and Enrolling IQ Lock-PGP with Add PowerG.
4. Checking the PowerG signal strength: for more information, see and Checking the PowerG signal strength of the device.
5. Configuring the PowerG options.

Switching to PowerG protocol

PowerG is the default RF protocol.

If you switched to the Z-Wave protocol, to restore the PowerG protocol, complete the following steps.

Note: Make sure to delete the smart lock from the panel if you previously enrolled it with a different protocol.

Note: The smart lock is in stand-alone mode until you enroll it on a panel.

- Long press the RF button for three seconds or more.

  Success: Two green fast blinks of the LED indicator. Two short beeps of the buzzer.

  Fail: Two red fast blinks of the LED indicator. Two short beeps of the buzzer.

  Next step for fail: Repeat the long press of the RF button for three seconds or more.

For more information, see:

- Checking RF protocol
- Switching to Z-Wave protocol

© 2026 Johnson Controls. All rights reserved.

PowerG QR code location

Figure 6 displays location of QR codes for PowerG enrollment.

Figure 6: PowerG QR code location

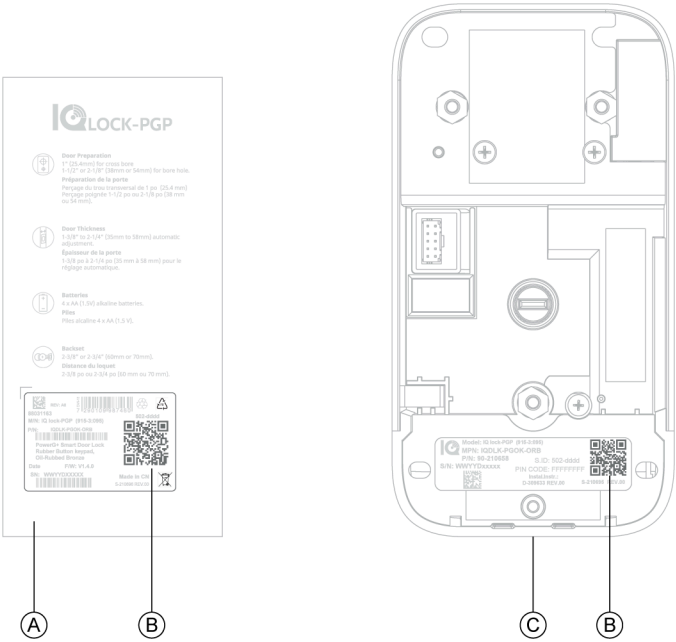

Callout	Description
A	Color box side
B	QR code for PowerG enrollment
C	Interior-assembly back side

Enrolling IQ Lock-PGP with Auto Learn Devices

Before you begin:

- Ensure the device is powered on.
- Ensure that you set the PowerG RF protocol on the smart lock: for more information, see Checking RF protocol and Switching to PowerG protocol.

Note: Powering on the smart lock starts a 48-hours timer to complete the enrollment process. To restart the timer, remove and reinsert the smart lock's batteries, or press the **RES** button for less than one second.

To enroll a PowerG device on the IQ panel using the **Auto Learn Devices** feature, complete the following steps.

1. On the IQ panel menu, tap **Settings** > **Advanced Settings**, enter the installer or dealer code then tap **Installation** > **Devices** > **Automation Devices** > **Auto Learn Devices**.
2. When the panel recognizes the device, tap **OK** on the pop-up window that appears. Set the device details in the configuration pop-up window.

© 2026 Johnson Controls. All rights reserved.

For more information, see Configuring the PowerG options.

3. **Optional:** Enter the PIN code on the product label for increased security during enrollment. The device does not pair with the panel if you enter an incorrect PIN code.

   Note: if you are not entering the PIN code, you need to leave it blank.

4. Tap **Pair**.

   The device enrolls successfully and the LED indicator displays the PowerG signal strength: for more information, see PowerG local diagnostic test.

If the smart lock does not automatically enroll, press the **RES** button for less than one second. This starts the auto-enroll process.

Enrolling IQ Lock-PGP with Add PowerG

Before you begin:

- Ensure power is not connected to the device: remove the device batteries.
- Ensure that you set the PowerG RF protocol on the smart lock: for more information, see Checking RF protocol and Switching to PowerG protocol.

Note: Powering on the smart lock starts a 48-hours timer to complete the enrollment process. To restart the timer, remove and reinsert the smart lock's batteries, or press the **RES** button for less than one second.

Use the **Add PowerG** feature to enroll the device on the IQ panel, by entering the device ID or scanning the QR code on the device package.

To enroll a PowerG device on the IQ panel using the **Add PowerG** feature, complete the following steps.

1. On the IQ panel menu, tap **Settings** > **Advanced Settings**, enter the installer code then tap **Installation** > **Devices** > **Automation Devices** > **Add PowerG**.
2. Enter the device id in the **Sensor ID** field, or tap **Scan QR Code** and scan the PowerG QR code on the device, or on the device color box.

   To locate the PowerG QR code, see PowerG QR code location.
3. Set device details. For more information, see Configuring the PowerG options.
4. **Optional:** Enter the PIN code on the product label for increased security during enrollment. The device does not pair with the panel if you enter an incorrect PIN code.
5. Tap **Pair**.
6. Power on the device: insert the device batteries.

The device enrolls successfully and the LED indicator displays the PowerG signal strength: for more information, see PowerG local diagnostic test.

PowerG local diagnostic test

After enrollment succeed the device automatically enters test mode.

In test mode the LED indicator shows the strength of the PowerG signal.

The following table displays the received signal strength indication.

Table 5: Signal strength indication

LED response	Reception
Green LED blinks	Strong
Yellow LED blinks	Good
Red LED blinks	Poor
No blinks	No communication

To restart the test mode remove and reinsert the batteries.

© 2026 Johnson Controls. All rights reserved.

Important: Reliable reception must be assured. Poor signal strength is not acceptable. If you receive poor signal strength, move the panel, or install a repeater and re-test until the signal strength is strong. Strong signal strength is required for the device to operate correctly. For detailed diagnostic test instructions, refer to the relevant IQ panel installation guide.

Note: After installation, verify the product functionality in conjunction with the compatible panels.

To check the PowerG signal strength after the test mode ends, see Checking the PowerG signal strength of the device.

Checking the PowerG signal strength of the device

To check the PowerG signal strength of a PowerG device on the IQ panel, complete the following steps.

1. Ensure that the device is powered on.
2. On the IQ panel menu, tap **Settings** > **Advanced Settings**, enter the installer code then tap **System Tests** > **PowerG Test** > **Run**.

Important: Reliable reception must be assured. Poor signal strength is not acceptable. If you receive poor signal strength, move the panel, or install a repeater and re-test until the signal strength is strong. Strong signal strength is required for the device to operate correctly. For detailed diagnostic test instructions, refer to the relevant IQ panel installation guide.

Deleting from PowerG network

To delete the smart lock from the panel PowerG network, complete the following steps.

1. Follow the delete procedure on the panel instructions.
   If you delete the smart lock from the panel without performing factory reset, existing user codes remain functional.
2. Reset the smart lock to factory settings: for more information, see Resetting the factory default settings.
   The smart lock deletes all user codes and sets the stand-alone mode: for more information, see Setting up stand-alone mode.

Configuring the PowerG options

Table 6 shows the options that you can configure when enroll the device on the IQ panel.

To change the device options after you enrolled the device, on the IQ panel menu, tap **Settings** > **Advanced Settings** > enter the installer code then tap **Installation** > **Devices** > **Automation Devices** > **Edit Device** > tap the edit icon of the device to edit.

Table 6: Configuration options

Option	Description
Doorlock Volume	Enables and disables the smart lock buzzer. • **On**: The buzzer is enabled. • **Off**: The buzzer is disabled. **Note:** Low battery, keypad lock, and lock jam events override these settings. Optional settings: **On** (default), and **Off**.
Re-Lock Timer	Sets the delay before the smart lock automatically re-locks after unlocking. Optional settings: **Disabled** (default), **30 Seconds**, **60 Seconds**, **120 Seconds**, and **180 Seconds**.
Code to Lock	Sets the lock operation: • **Disabled**: to lock the smart lock you do not need to enter the user code. • **Enabled**: to lock the smart lock you need to enter the user code. Optional settings: **Disabled** (default), and **Enabled**.

© 2026 Johnson Controls. All rights reserved.

Setting up Z-Wave network mode

Setting up the Z-Wave network mode consists of the following main steps

1. Checking the current RF protocol: for more information, see Checking RF protocol.
2. If PowerG is the current RF protocol, switch to the Z-Wave RF protocol: for more information, see Switching to Z-Wave protocol.
3. Enrolling the smart lock on the panel: for more information, see Enrolling IQ Lock-PGP with Add Device or Enrolling IQ Lock-PGP with Smart Start.

   Note: If you want to use the Z-Wave long-range protocol, you must use the Enrolling IQ Lock-PGP with Smart Start procedure.
4. Checking the Z-Wave signal strength: for more information, see Z-Wave local diagnostic test and Checking the Z-Wave signal strength of the device.
5. Configuring the Z-Wave options.

Switching to Z-Wave protocol

PowerG is the default RF protocol.

To switch to the Z-Wave protocol, complete the following steps.

Note: Make sure to delete the smart lock from the panel if you previously enrolled it with a different protocol.

Note: The smart lock is in stand-alone mode until you enroll it on a panel.

- Press the RF button three times rapidly.
  - **Success:** Two green fast blinks of the LED indicator. Two short beeps of the buzzer.
  - **Fail:** Two red fast blinks of the LED indicator. Two short beeps of the buzzer.

  Next step for fail: Repeat pressing the RF button three times rapidly.

For more information, see:

- Checking RF protocol
- Switching to PowerG protocol

Z-Wave QR code location

Figure 7 displays location of QR codes for Z-Wave enrollment.

© 2026 Johnson Controls. All rights reserved.

Figure 7: Z-Wave QR code location

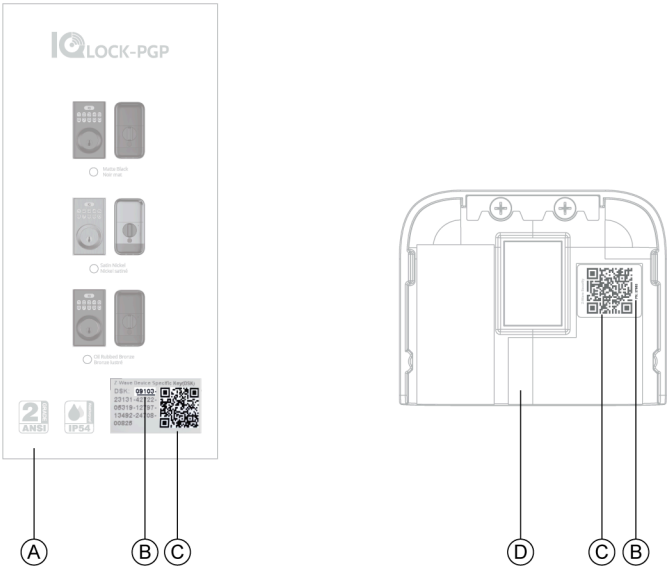

Callout	Description
A	Color box side
B	PIN
C	QR code for Z-Wave enrollment
D	Battery cover back side

Enrolling IQ Lock-PGP with Add Device

Before you begin:

- Ensure the device is powered on.
- Ensure that you set the Z-Wave RF protocol on the smart lock: for more information, see Checking RF protocol and Switching to Z-Wave protocol.

To enroll a Z-Wave device on the IQ panel using the **Add Device** feature, complete the following steps.

1. On the IQ panel menu, tap **Settings** > **Advanced Settings**, enter the installer code then tap **Installation** > **Devices** > **Automation Devices** > **Z-Wave Devices** > **Add Device** > **Include**.
2. Short press the **RES** button when the message appears.
3. Scan the Z-Wave QR code on the device, or on the device color box, or manually enter the device PIN, and tap **Add DSK**.

   To locate the Z-Wave QR code and PIN, see Z-Wave QR code location.
4. Set the device details in the configuration pop-up window.

   For more information, see Configuring the Z-Wave options.
5. Tap **Add** to save the information and complete the process.

   The device enrolls successfully and the IQ panel returns to previous menu.

© 2026 Johnson Controls. All rights reserved.

Enrolling IQ Lock-PGP with Smart Start

Before you begin:

- Ensure power is connected to the device.
- Ensure that you set the Z-Wave RF protocol on the smart lock: for more information, see Checking RF protocol and Switching to Z-Wave protocol.

Use the **Smart Start** feature to enroll the device on the IQ panel, by entering the device DSK code or scanning the QR code on the device package.

To enroll a Z-Wave device on the IQ panel using the **Smart Start** feature, complete the following steps.

1. On the IQ panel menu, tap **Settings** > **Advanced Settings**, enter the installer code then tap **Installation** > **Devices** > **Automation Devices** > **Z-Wave Devices** > **Smart Start** > **Include**.
2. Enroll the device:
   a. If you want to use regular Z-Wave protocol, scan the Z-Wave QR code on the device, or on the device color box, or manually enter the DSK code, and tap **Add DSK**.
   b. If you want to use Z-Wave long-range protocol, scan the Z-Wave QR code on the device, or on the device color box, and tap **Add**.

   To locate the Z-Wave QR code, see Z-Wave QR code location.
3. Set the device details in the configuration pop-up window.

   For more information, see Configuring the Z-Wave options.
4. Tap **Add** to save the information and complete the process.

   The device enrolls successfully and the IQ panel returns to previous menu.

Z-Wave local diagnostic test

After enrollment succeed the device automatically enters test mode.

In test mode the LED indicator shows the strength of the Z-Wave signal.

The following table displays the received signal strength indication.

Table 7: Signal strength indication

LED response	Reception
Green LED blinks	Strong
Yellow LED blinks	Good
Red LED blinks	Poor
No blinks	No communication

To restart the test mode remove and reinsert the batteries.

Important: Reliable reception must be assured. Poor signal strength is not acceptable. If you receive poor signal strength, move the panel, or install a repeater and re-test until the signal strength is strong. Strong signal strength is required for the device to operate correctly. For detailed diagnostic test instructions, refer to the relevant IQ panel installation guide.

Note: After installation, verify the product functionality in conjunction with the compatible panels.

To check the Z-Wave signal strength after the test mode ends, see Checking the Z-Wave signal strength of the device.

Checking the Z-Wave signal strength of the device

To check the Z-Wave signal strength of a Z-Wave device on the IQ panel, complete the following steps.

1. Ensure that the device is powered on.
2. On the IQ panel menu, tap **Settings** > **Advanced Settings**, enter the installer code then tap **System Tests** > **Z-Wave Tests** > **Z_Wave Diagnostics**.

© 2026 Johnson Controls. All rights reserved.

Important: Reliable reception must be assured. Poor signal strength is not acceptable. If you receive poor signal strength, move the panel, or install a repeater and re-test until the signal strength is strong. Strong signal strength is required for the device to operate correctly. For detailed diagnostic test instructions, refer to the relevant IQ panel installation guide.

Deleting from Z-Wave network

To delete the smart lock from the panel Z-Wave network, complete the following steps.

1. Follow the delete procedure on the panel instructions, and short press the **RES** button.
   Existing user codes remain functional, and the smart lock turns off both network mode and stand-alone mode.
2. Reset the smart lock to factory settings: for more information, see Resetting the factory default settings.
   The smart lock deletes all user codes and sets the stand-alone mode: for more information, see Setting up stand-alone mode.

Configuring the Z-Wave options

Table 8 and Table 9 show the options that you can configure when enroll the device on the IQ panel.

To change the device options after you enrolled the device, on the IQ panel menu, tap **Settings** > **Advanced Settings** > enter the installer code then tap **Z-Wave Device List** > tap **Info** of the device that you want to edit.

Scroll down to **Command_Class_Configuration_V4** or **Command_Class_DoorLock_V4**, and tap **Configuration/Capabilities**, according with the option you want to edit.

Edit the options according with the information in the **Description** columns of Table 8 and Table 9.

Table 8: Command_Class_Configuration_V4 options

Option	Description
Set the volume to silent	Enables and disables the smart lock buzzer. **Note:** Low battery, keypad lock, and lock jam events override this set up. **Parameter Number** = 1 **Size** = 1 **Configuration Value**: 0 = disabled; 1 = enabled (default)
Code to Lock	If disabled, to lock the smart lock you do not need to enter the user code. If enabled, to lock the smart lock you need to enter the user code. **Parameter Number** = 4 **Size** = 1 **Configuration Value**: 0 = disabled (default); 1 = enabled

Table 9: Command_Class_DoorLock_V4 options

Option	Description
Auto-relock time	Sets the delay before the smart lock automatically re-locks after unlocking. Optional settings: • 0 = disabled (default) • 1 to 30 = 30 seconds • 31 to 60 = 60 seconds • 61 to 120 = 120 seconds • 121 to 65535 = 180 seconds

Note: The other options in the **Command_Class_DoorLock_V4** group do not apply.

© 2026 Johnson Controls. All rights reserved.

Smart lock operation

With the smart lock you can perform the following operations.

- Locking with the IQ logo key
- Locking and unlocking by user code
- Locking and unlocking by thumb turn
- Locking and unlocking with key
- Locking and unlocking remotely

Locking with the IQ logo key

Note: In network mode, this operation is only possible if the **Code to Lock** option is disabled. For more information, see Configuring the PowerG options and Configuring the Z-Wave options.

To lock the smart lock using the **IQ logo** key, complete the following steps.

1. Press the **IQ logo** key for more than one second.

   Lock success: One red blink of the **IQ logo** LED. One red long blink of the LED indicator. One beep of the buzzer. The door locks.

   Low battery: Three red fast blinks of the **IQ logo** LED. Three short beeps of the buzzer.

   Note: The low battery indications follows after the lock and unlock success indications.

   Important: To avoid being locked out of your own premises, replace the device batteries as soon as possible: for more information, see Replacing batteries.

   Lock jam: Ten long beeps of the buzzer.

Locking and unlocking by user code

You can lock and unlock the smart lock by entering a valid user code on the keypad.

When the smart lock is in stand-alone mode, you use the stand-alone user codes and master user code, to unlock.

Note: When the smart lock is in stand-alone mode, you can lock it with the **IQ logo** key only: for more information, see Locking with the IQ logo key.

When the smart lock is in network mode, you use the user codes of the users associated to the smart lock, to lock and unlock it: for more information, refer to the related cloud service instructions.

Important: If you enter an incorrect user code ten times, the smart lock keypad disables for three minutes. For more information, see Incorrect user code entry.

To lock and unlock the smart lock using the user code, complete the following steps.

1. Enter the user code.

   Lock success: One red blink of the **IQ logo** LED. One red long blink of the LED indicator. One beep of the buzzer. The door locks.

   Unlock success: One green blink of the **IQ logo** LED. One green long blink of LED indicator. One beep of the buzzer

   Low battery: Three red fast blinks of the **IQ logo** LED. Three short beeps of the buzzer.

   Note: The low battery indications follows after the lock and unlock success indications.

   Lock jam: Ten long beeps of the buzzer.

   Fail: Two red fast blinks of the **IQ logo** LED. One beep of the buzzer.

   Fail causes: Entered an invalid user code.

   Next step for fail: Repeat the step.

   Keypad lock: Three red fast blinks of the **IQ logo** LED. Three fast blinks of the digit keys. Three short beeps of the buzzer.

   Keypad lock causes: You enter an incorrect user code ten times.

© 2026 Johnson Controls. All rights reserved.

Next step: Wait until the 3-minute lock period has expired, or use an alternate method. For more information, see Incorrect user code entry.

Locking and unlocking by thumb turn

To lock and unlock the smart lock using the **thumb turn**, complete the following steps.

- To lock the smart lock, rotate the thumb turn horizontal, in the lock position.
- To unlock the smart lock, rotate the thumb turn vertical, in the unlock position.

  Lock success: One red blink of the **IQ logo** LED. One red long blink of the LED indicator. One beep of the buzzer. The door locks.

  Unlock success: One green blink of the **IQ logo** LED. One green long blink of LED indicator. One beep of the buzzer

  Low battery: Three red fast blinks of the **IQ logo** LED. Three short beeps of the buzzer.

  Note: The low battery indications follows after the lock and unlock success indications.

  Important: To avoid being locked out of your own premises, replace the device batteries as soon as possible: for more information, see Replacing batteries.

Locking and unlocking with key

To lock and unlock the smart lock using the **key**, complete the following steps.

1. Insert the key in the keyhole.
2. a. To lock the smart lock, rotate the key 180°, clockwise or anticlockwise, depending on the door's orientation. To extract the key, rotate it back in vertical position.
   b. To unlock the smart lock, rotate the key 90°, clockwise or anticlockwise, depending on the door orientation. To extract the key, rotate it back in vertical position.

   Lock success: One red blink of the **IQ logo** LED. One red long blink of the LED indicator. One beep of the buzzer. The door locks.

   Unlock success: One green blink of the **IQ logo** LED. One green long blink of LED indicator. One beep of the buzzer

   Low battery: Three red fast blinks of the **IQ logo** LED. Three short beeps of the buzzer.

   Note: The low battery indications follows after the lock and unlock success indications.

   Important: To avoid being locked out of your own premises, replace the device batteries as soon as possible: for more information, see Replacing batteries.

Locking and unlocking remotely

Note: You can lock and unlock the smart lock remotely when it is in network mode: for more information, see Setting up network mode.

When the smart lock is in network mode, you can lock and unlock it remotely, using compatible panels, and supported cloud services.

For updated list of compatible panels, and supported cloud services, access https://iqsecurityproducts.com/iq-lock-pgp/.

To lock and unlock the smart lock remotely, refer to the instructions of used panel, and cloud services.

Smart lock notifications

When the smart lock is in network mode, it sends the following notifications to the panel, and cloud services:

- Locking and unlocking
- Lock jam
- Low battery

© 2026 Johnson Controls. All rights reserved.

Low battery

The smart lock reports low battery to the panel when its battery level is less than 20%: the trouble icon appears on the lock symbol on the IQ panel locks page. The IQ panel low battery alert clears when the battery level is greater than 20%.

Important: To avoid being locked out of your own premises, replace the device batteries as soon as possible: for more information, see Replacing batteries.

Incorrect user code entry

When you enter an incorrect user code ten times, the smart lock keypad disables for three minutes. When this happens, the smart lock sends a notification to the panel. To unlock the smart lock after you enter the user code incorrectly, use one of the following methods.

- If you want to unlock the smart lock using its keypad, wait until the 3-minute lock period has expired.
- If you want to unlock the smart lock immediately, use the following alternate methods:
  - Locking and unlocking with key
  - Locking and unlocking remotely

Locking and unlocking with dead battery

If locking and unlocking fail due to dead battery, use the following alternate methods:

- If you are inside the premises, see Locking and unlocking by thumb turn
- If you are outside the premises, see Locking and unlocking with key

Important: To avoid being locked out of your own premises, replace the device batteries as soon as possible: for more information, see Replacing batteries.

Replacing batteries

In the event of low battery trouble, to avoid being locked out of your own premises, replace the device batteries as soon as possible.

Before you begin:
Make sure you have four AA alkaline batteries.

Important:

Always replace all batteries as a complete set, and avoid mixing different models or brands to maintain optimal performance and prevent issues. Use brand-new batteries for replacement to ensure accurate battery level reporting and proper lock functionality.

To replace the smart lock batteries, compete the following steps.

1. Slide up the battery cover.
2. Pull out the ribbon to remove the old batteries.
3. Insert the new batteries, observing the polarity indicated in the battery compartment.

   Note: Make sure to put the ribbon under the batteries: this helps to remove the batteries out when required.
4. Close the battery cover.

After battery replacement the smart lock resumes normal operation.

Resetting the factory default settings

To reset the smart lock to factory default settings, complete the following steps.

1. Remove the battery cover.
2. Long press the **RES** button with the tool **M**, until you hear a beep.

© 2026 Johnson Controls. All rights reserved.

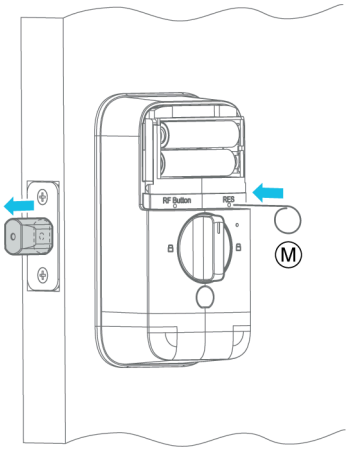

If the reset is successful, the smart lock performs the following actions:

- extends the latch bolt
- sets stand-alone mode
- deletes all user codes
- sets the default 12345678 master user code

For more information, see Smart lock overview.

If you perform a factory default reset, you must delete the smart lock manually from the panel: for more information, refer to the panel's instructions.

Troubleshooting

Operation	Trouble signal	Trouble description	Solution
Locking and unlocking by user code	**Lock jam:** Ten long beeps of the buzzer.	The lock is jammed	• Using the thumb turn,check that the latch bolt extends and retracts smoothly • Check that the door closes correctly
Locking and unlocking by user code	**Keypad lock:** Three red fast blinks of the **IQ logo** LED. Three fast blinks of the digit keys. Three short beeps of the buzzer.	The keypad is locked because you entered an incorrect user code ten times	• Wait three minutes for the keypad to unlock • Use an alternate method: for more information, see Smart lock operation

© 2026 Johnson Controls. All rights reserved.

Operation	Trouble signal	Trouble description	Solution
• Power up • Locking and unlocking	**Low battery:** Three red fast blinks of the **IQ logo** LED. Three short beeps of the buzzer. **Note:** The low battery indications follows after the lock and unlock success indications.	Battery level is less than 20%	Replace the batteries: for more information, see Replacing batteries

FCC and ISED Canada compliance statement

FCC/ISED Canada certified models are: IQDLK-PGOK-SN, IQDLK-PGOK-MB and QDLK-PGOK-ORB.

This device complies with FCC Rules Part 15 and with ISED Canada license-exempt RSS standard(s).

Operation is subject to two conditions:

(1) This device may not cause harmful interference, and (2) this device must accept any interference that may be received or that may cause undesired operation.

Le présent appareil est conforme aux CNR d'ISED Canada applicables aux appareils radio exempts de licence. L'exploitation est autorisée aux deux conditions suivantes:

(1) l'appareil ne doit pas produire de brouillage, et (2) l'utilisateur de l'appareil doit accepter tout brouillage radioélectrique subi, même si le brouillage est susceptible d'en compromettre le fonctionnement.

To comply with FCC Section 1.1310 for human exposure to radio frequency electromagnetic fields and ISED Canada requirements, implement the following instruction:

A distance of at least 20 cm between the equipment and all persons should be maintained during the operation of the equipment. The antenna of this device shall not be collocated with other antennas or transmitters.

Le dispositif doit être placé à une distance d'au moins 20 cm à partir de toutes les personnes au cours de son fonctionnement normal. Les antennes utilisées pour ce produit ne doivent pas être situés ou exploités conjointement avec une autre antenne ou transmetteur.

Note: This equipment has been tested and found to comply with the limits for a Class B digital device, pursuant to part 15 of the FCC Rules. These limits are designed to provide reasonable protection against harmful interference in a residential installation. This equipment generates, uses and can radiate radio frequency energy and, if not installed and used in accordance with the instructions, may cause harmful interference to radio communications. However, there is no guarantee that interference will not occur in a particular installation. If this equipment does cause harmful interference to radio or television reception, which can be determined by turning the equipment off and on, the user is encouraged to try to correct the interference by one or more of the following measures:

- Reorient or relocate the receiving antenna.
- Increase the separation between the equipment and receiver.
- Connect the equipment into an outlet on a circuit different from that to which the receiver is connected.
- Consult the dealer or an experienced radio/TV technician for help.

This Class B digital apparatus complies with Canadian ICES-003.

Cet appareil numerique de la classe B est conforme a la norme NMB-003 du Canada.

WARNING: Changes or modifications to this equipment not expressly approved by the party responsible for compliance could void the user’s authority to operate the equipment.

© 2026 Johnson Controls. All rights reserved.

Limited Warranty and EULA

To view Warranty and EULA information, access the link https://iqsecurityproducts.com/iq-lock-pgp/ or scan the following QR code:

Technical support

Intrusion Tech support: +1- 855-476-5797 #2 or 1-800-387-3630

Email: intrusion-support@jci.com

© 2026 Johnson Controls. All rights reserved.

JOHNSON CONTROLS, TYCO and DSC are trademarks and/or registered trademarks. Unauthorized use is strictly prohibited.