■PRODUCT DRAWING

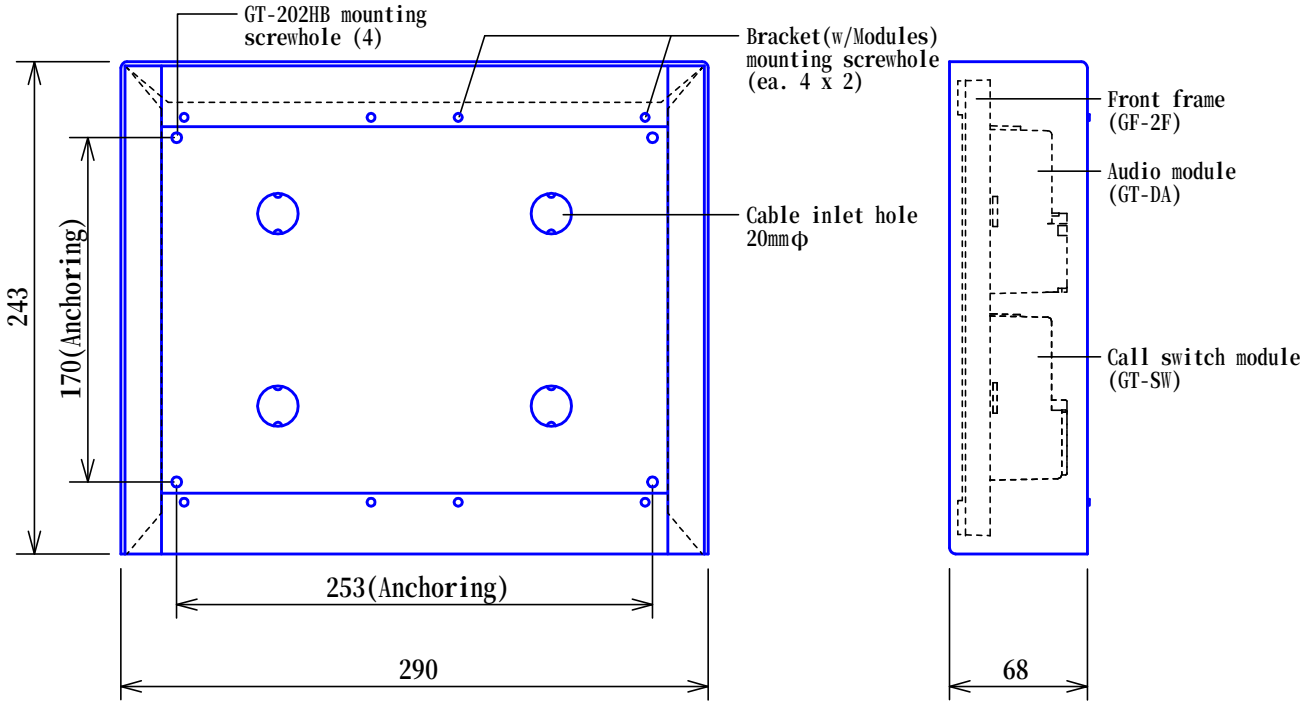

●MOUNTING

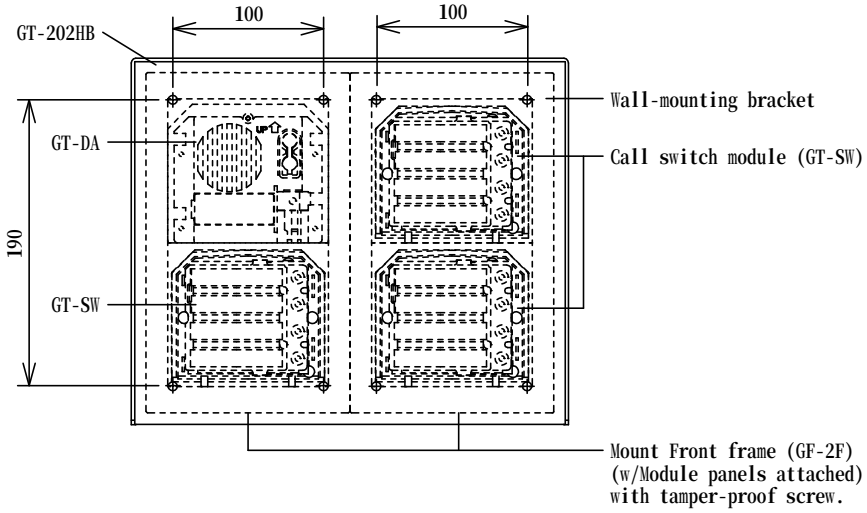

* GF-2B Back box is not used.

■SPECIFICATIONS

Mounting	Surface wall-mount
Housing	Aluminum, coated by metal painting (Color: Pale beige mica metallic)
Remarks	Used for: GF-2F (2-row) *GF-2B back box is not used.

DESCRIPTION	FIG. NAME		UNIT	DATE
2-MODULE HOODED BOX (2-row)	PRODUCT/SPECIFICATIONS		mm	11 March, 2011
MODEL NO.	FIG.NO.	PAGE	REVISION	AIPHONE
GT-202HB	G53383-1-1	1/1	1	