RoHS (2011/65/EU) COMPLIANT

CUSTOMER:	P/N: 31211B REV. .	APPROVED BY:

REVISIONS

REV.	DESCRIPTION	DATE
A		
B		

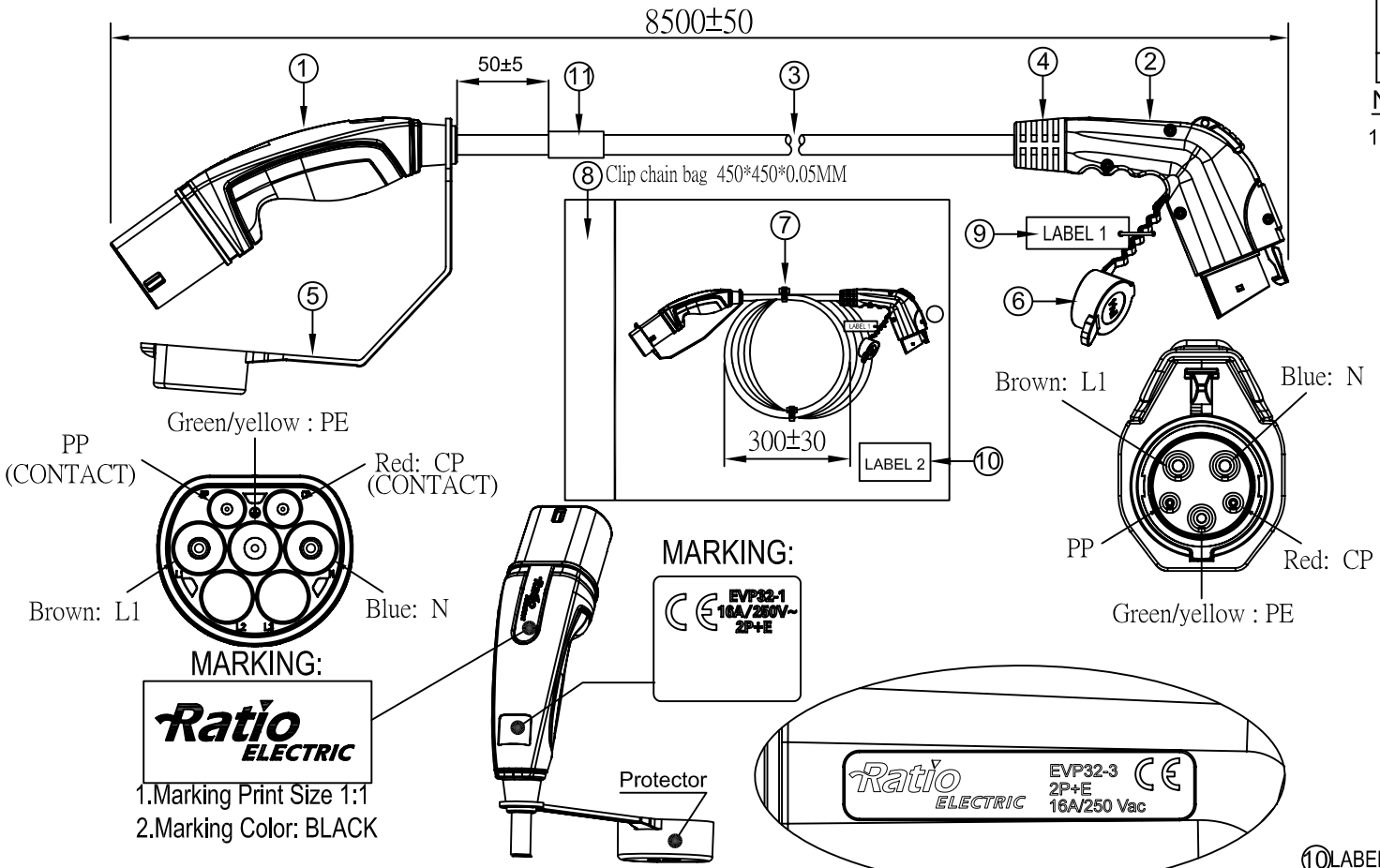

NOTES:

1. The outer box label needs to be labeled with the serial number of the serial number.
   For example, the content of the 50PCS tag serial number is "WS-000001~WS-000050" (*Contents are based on customer)
   The outer box label needs to be added:
   "Serial No.:WS-000001~WS-000050"

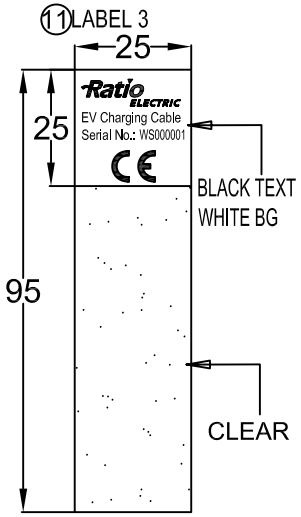

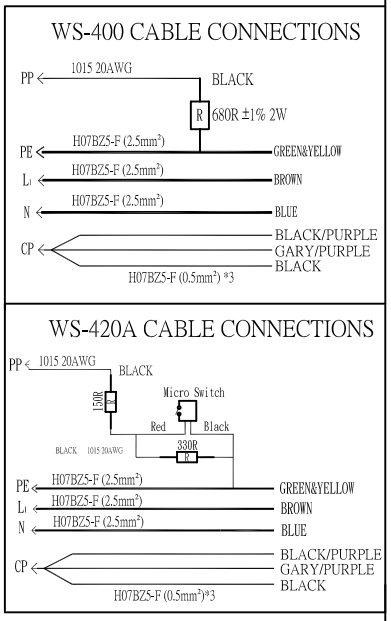

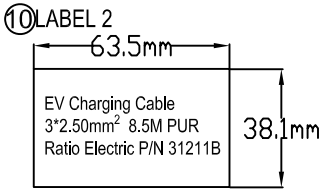

ITEM	DESCRIPTION	COLOR	Q'TY
⑪	LABEL 3	---	1
⑩	LABEL 2	---	1
⑨	LABEL 1+ Cable ties BLACK	---	1
⑧	Clip chain bag 450*450*0.05MM	---	1
⑦	Cable ties	BLACK	2
⑥	WS-420 Waterproof cover (P/N:P42000N22BKZWS)	BLACK	1
⑤	WS-400 Waterproof cover (P/N:P40000C22BKZWS)	BLACK	1
④	WS-SR-592	BLACK	1
③	H07BZ5-F 3G 2.5mm²+3x0.5mm²	BLACK	1
②	WS-420A 16 (A) 250 (V)	GRAY Pantone no. 430C	1
①	WS-400 16 (A) 250 (V)+ Resistance 680R ±1% 2W	GREY RAL 7023	1

	SIGNATURE
SAFETY ENGINEER:	
MANAGER BY:	
CHECKED BY:	
DRAWN BY:	

Ratio Electric B.V.
www.ratio-electric.com

PRODUCT NO.: WS-400+WS-420A	DATE: 2018/08/21	
UNIT: mm	SHEET: 1 OF 1	REV.
DWG NO: 0318-0270		D

THE INFORMATION CONTAINED HEREIN IS PROPRIETARY TO Ratio Electric. ANY USE OR DISCLOSURE OF THIS INFORMATION, EXCEPT FOR THE EXCLUSIVE BENEFIT OF Ratio Electric IS PROHIBITED.