COOPER Notification

Series Colored Lens Strobe Appliances: Strobes, Horns Strobes, Speaker Strobes and Multitone Strobes with Amber, Blue, Green or Red Lens



Description:

Wheelock colored lens strobe notification appliances - strobes, horn strobes*, speaker strobes, and multi-tone strobes - are built with the same high quality circuits and parts used in the Cooper Wheelock life safety strobes and speakers, and are available with clear, amber or blue lenses, with other colors available through special order. The colored lens strobe products are listed under UL Standard 1638 for general signaling and the amber lenses been tested to meet UL 1971 light distribution. These appliances are suitable for indoor applications, with specific models available for outdoor and weatherproof applications. The indoor models can be wall or ceiling mounted (model dependent) to standard electrical boxes or to Wheelock's surface mount boxes. The outdoor models can be wall mounted to standard electrical boxes or to Wheelock's surface mount boxes. The RSS models have an integrated strobe mounting plate that can be mounted to standard electrical boxes or to Wheelock's surface mount boxes.

The strobes have been tested to operate from 16 to 33 vdc (using filtered or FWR voltage). Intensity options for these models include multi-candela models with four field selectable settings of 15, 30, 75, and 95cd. High ceiling models can be field selectable for 115 or 177 cd.

Audible strobe appliances can be field set to provide either High (HI) dBA, Medium (MED) dBA or Low (LO) dBA sound output. Speaker strobes have field selectable input voltage of 25/70 VRMS and field selectable taps of 1/8, 1/4, 1/2, 1 and 2 watts. The Series E70-24MCC and E90-24MCC Multi-Candela provides four selectable light output intensities in one unit and incorporate a Speaker Mounting Plate attached to the speaker for ease of installation. Weatherproof speaker strobes have field selectable taps of 1/8, 1/4, 1/2, 1, 2, 4, and 8 watts.

All inputs are compatible with standard supervision of circuit wiring by an FACP and provide a synchronized strobe appliance when used in conjunction with Dual Sync Module (DSM) or Wheelock power supplies with patented sync protocol.

Other Wheelock signaling products can be provided with colored lens strobes - contact Customer Service for availability.

Features:

- Approvals include: UL 1638
- Amber Lenses have been tested to meet UL 1971 light distribution
- Choice of strobe lens colors – amber, blue, red (some models or by special order)
- Field selectable candela settings of 15/30/75/95cd or high intensity models with 115/177cd settings
- Indoor 24VDC models with UL "Regulated Voltage" at 16-33 VDC using filtered DC or unfiltered FWR input voltage
- Weatherproof strobe notification appliances 12 VDC
- Multitone appliance
- Strobes can be synchronized with Wheelock's DSM sync module or power supplies
- Combination speaker/strobes available for voice messages with visual alerting
- Mount to standard electrical boxes
- High quality designs from the leader in fire notification alarms

Applications:

The Wheelock colored lens strobe products are designed for effective alerting of employees or personnel in industrial, military or government applications. They are ideal for Mass Notification systems and for emergency, warning or trouble notification in many industrial operations.

* NOTE: Horn strobes incorporates a temporal pattern (specified by ANSI/NFPA for standard emergency evacuation signaling.) The temporal pattern should be used only for fire evacuation signaling and not for any other purpose.

UL®
S5391

NOTE: All CAUTIONS and WARNINGS are identified by the ⚠ symbol. All warnings are printed in bold capital letters.

⚠WARNING: PLEASE READ THESE SPECIFICATIONS AND ASSOCIATED INSTALLATION INSTRUCTIONS CAREFULLY BEFORE USING, SPECIFYING OR APPLYING THIS PRODUCT. FAILURE TO COMPLY WITH ANY OF THESE INSTRUCTIONS, CAUTIONS OR WARNINGS COULD RESULT IN IMPROPER APPLICATION, INSTALLATION AND/OR OPERATION OF THESE PRODUCTS IN AN EMERGENCY SITUATION, WHICH COULD RESULT IN PROPERTY DAMAGE, AND SERIOUS INJURY OR DEATH TO YOU AND/OR OTHERS.

General Notes:

- Strobes are designed to flash at 1 flash per second minimum over the Regulated Voltage Range.
- Products are listed for indoor use with a temperature range of 32ºF to 120ºF (0ºC to 49ºC) and maximuim humidity of 93% (± 2%).
- Weatherproof products are listed for use with a temperature range of -31ºF to 150ºF (-35ºC to 66ºC) and maximum humidity of 95% RH.

Specification and Ordering Information

Model Number	Order Code	Lens Color	Strobe Candela[Note 1]	Strobe Voltage	Mounting	Indoor or Weatherproof	Agency Approvals
RSSA-24MCC-NW	0202	AMBER	15/30/75/95	24VDC	Ceiling/Wall	Indoor	UL
RSSB-24MCC-NW	0203	BLUE	15/30/75/95	24VDC	Ceiling/Wall	Indoor	UL
RSSG-24MCC-NW	0204	GREEN	15/30/75/95	24VDC	Ceiling/Wall	Indoor	UL
RSSR-24MCC-NW	5917	RED	15/30/75/95	24VDC	Ceiling/Wall	Indoor	UL
RSSA-24MCCH-NW	0525	AMBER	115/177	24VDC	Ceiling/Wall	Indoor	UL
RSSB-24MCCH-NW	6154	BLUE	115/177	24VDC	Ceiling/Wall	Indoor	UL
RSSG-24MCCH-NW	6155	GREEN	115/177	24VDC	Ceiling/Wall	Indoor	UL
RSSR-24MCCH-NW	6156	RED	115/177	24VDC	Ceiling/Wall	Indoor	UL
ASA-24MCC-NW	6162	AMBER	15/30/75/95	24VDC	Ceiling/Wall	Indoor	UL
ASB-24MCC-NW	6164	BLUE	15/30/75/95	24VDC	Ceiling/Wall	Indoor	UL
MTA-121575W-NW	0048	AMBER	15[Note 2]	12VDC	Wall	Indoor	UL*
MTA-24MCCH-NW	6167	AMBER	115/177	24VDC	Ceiling/Wall	Indoor	UL*
MTB-24MCCH-NW	6168	BLUE	115/177	24VDC	Ceiling/Wall	Indoor	UL*
MTG-24MCCH-NW	6169	GREEN	115/177	24VDC	Ceiling/Wall	Indoor	UL*
MTR-24MCCH-NW	6170	RED	115/177	24VDC	Ceiling/Wall	Indoor	UL*
E50A-24MCC-NW	6165	AMBER	15/30/75/95	24VDC	Wall	Indoor	UL*
E50B-24MCC-NW	6166	BLUE	15/30/75/95	24VDC	Wall	Indoor	UL*
E70A-24MCC-NW	0209	AMBER	15/30/75/95	24VDC	Ceiling/Wall	Indoor	UL*
E70B-24MCC-NW	0210	BLUE	15/30/75/95	24VDC	Ceiling/Wall	Indoor	UL*
E90A-24MCC-NW	0213	AMBER	15/30/75/95	24VDC	Ceiling	Indoor	UL*
E90B-24MCC-NW	0214	BLUE	15/30/75/95	24VDC	Ceiling	Indoor	UL*
ET70WPA-2475-NW	0220	AMBER	30 [Note 3]	24VDC	Ceiling/Wall	Weatherproof	UL*
MTWPA-2475-NW	1649	AMBER	30 [Note 3]	24VDC	Ceiling/Wall	Weatherproof	UL*
MTWPA-24MCCH-NW	6171	AMBER	115/177	24VDC	Ceiling/Wall	Weatherproof	UL*
MTWPB-24MCCH-NW	6172	BLUE	115/177	24VDC	Ceiling/Wall	Weatherproof	UL*
MTWPG-24MCCH-NW	6173	GREEN	115/177	24VDC	Ceiling/Wall	Weatherproof	UL*
MTWPR-24MCCH-NW	6174	RED	115/177	24VDC	Ceiling/Wall	Weatherproof	UL*
RSSWPA-2475-NW	0240	AMBER	30 [Note 3]	24VDC	Ceiling/Wall	Weatherproof	UL
RSSWPA-24MCCH-NW	6158	AMBER	115/177	24VDC	Ceiling/Wall	Weatherproof	UL*
RSSWPB-24MCCH-NW	6159	BLUE	115/177	24VDC	Ceiling/Wall	Weatherproof	UL*
RSSWPG-24MCCH-NW	6160	GREEN	115/177	24VDC	Ceiling/Wall	Weatherproof	UL*
RSSWPR-24MCCH-NW	6161	RED	115/177	24VDC	Ceiling/Wall	Weatherproof	UL*
RSSPA-24MCC-NW	3308	AMBER	15/30/75/95	24VDC	Ceiling/Wall	Indoor	UL

Note 1: Candela ratings in the above table are per UL 1971 and are based on clear lenses. Models with 15/30/75/95 have 4 field-selectable candela settings, and models with 115/177 have 2 field-selectable candela settings. Intensity ratings are for clear lens – derate approximately 25% for amber, 55% for green, 70% for blue lenses, and 80% for red lenses.
Note 2: 15 candela models provide 15cd per UL 1971 and 75cd on axis per UL 1638.
Note 3: 30 candela weatherproof models provide 30cd per UL 1971 and 75 candela on axis at -31ºF and 185 candela on axis at 77ºF per UL 1638.
Note 4: 115/177 candela weatherproof models provide 115/177cd per UL 1971 and 50/75cd at -31ºF per UL 1638 (with UL 1971 light dispesion).

* UL Pending

Mounting Options Backboxes (ordered separately)

Indoor

Series	Flush Mount	Surface Mount
RSS	4” x 1-1/2”, 1-gang or 2-gang box	SHBB
AS	4” x 1-1/2”, 1-gang or 2-gang box	SHBB
MT	4” x 1-1/2”, 2-gang box	IOB
E50	4” x 2 1/8” (with extension ring)	E50SSB
E70	4” x 2-1/8” with extension ring	SBB
E90	4” x 2-1/8” with extension ring	SBB
RSSP	4” x 1-1/2”, 4” x 2 1/8”	SBL-2

Weatherproof

Series	Flush Mount	Surface Mount	
		Exposed Conduit	Concealed Conduit
MT	WFP	IOB	IOB+WP-KIT
ET70WP	WFP	IOB	IOB+WP-KIT
MTWP	WFP	IOB	IOB+WP-KIT
RSSWP	WFP	WPSBB	WPSBB+WP-KIT

Tone	HI/LO Volume	MT24VDC dBA Sound Output Anechoic Ratings at 10 Feet		
		20V	24V	31V
Horn	HI	97	99	100
	STD	91	93	94
Bell	HI	90	92	93
	STD	85	87	88
March Time	HI	97	99	100
	STD	91	93	94
Code 3 Horn	HI	97	99	100
	STD	91	93	94
Code 3 Tone	HI	93	95	96
	STD	88	90	91
Slow Whoop	HI	97	99	100
	STD	92	94	95
Siren	HI	96	98	99
	STD	91	93	94
HI/LO	HI	91	93	94
	STD	86	88	89

UL Max. Current Ratings (Maximum RMS Current Draw)								
Voltage		15cd	30cd	75cd	95cd	1575cd	115cd	177cd
RSSX-24MCC E70X-24MCC E90X-24MCC	16-33VDC	0.065	0.105	0.189	0.249	-	-	-
ASX-24MCC	16-33VDC	High - .095 Med - .080 Low - .074	High - .138 Med - .122 Low - .113	High - .221 Med - .201 Low - .198	High - .285 Med - .269 Low - .263	-	-	-
RSSPX-24MCC	16-33VDC	0.065	0.105	0.189	0.249	-	-	-
RSSWPX-2475W MTWPX-2475W	16-33VDC	-	-	0.138	-	-	-	-
RSSWPX-24MCCH MTWPX-24MCCH	16-33VDC						0.300	0.420
MTA-121575W*	8.0-17.5	-	-	-	-	0.255	-	-

Models	Voltage (VRMS)	Reverberant dBA at 10 Feet Per UL 1480 (Rated Watts)						
		1/8W	1/4W	1/2W	1W	2W	4W	8W
E50X-24MCC	25/70	77	79.5	82.5	85	88	-	-
E70X-24MCC	25/70	75	78	81	84	87	-	-
E90X-24MCC	25/70	75	78	81	84	87	-	-
ET70WPA-2475	25/70	77	80	83	86	88	91	93

Horn Setting	Volume	ASX-24MCC dBA Sound Output Anechoic dBA at 10 Feet		
		16.0VDC	24.0VDC	33.0VDC
Continuous	Low	86	90	92
	Medium	91	95	98
	High	95	99	101
Code 3	Low	86	90	92
	Medium	91	95	98
	High	95	99	101

Current Ratings for Multitone Audible Appliances with Horn Only		24VDC		12VDC	
		HI	STD	HI	STD
Horn	Broadband Horn (Continuous)	0.108	0.044	0.177	0.034
Bell	1560 Hz Modulated (0.07 Sec. ON/Repeat)	0.053	0.024	0.095	0.020
March Time Horn	Horn (0.25 Sec. ON/0.25 Sec. OFF/Repeat)	0.104	0.087	0.142	0.034
Code 3 Horn	Horn (ANSI S3.41 Temporal Pattern)	0.091	0.035	0.142	0.034
Code 3 Tone	500 Hz (ANSI S3.41 Temporal Pattern)	0.075	0.035	0.105	0.021
Slow Whoop	500-1200Hz Sweep (4.0 Sec. ON/0.5 Sec OFF/Repeat)	0.098	0.037	0.142	0.035
Siren	600-1200Hz Sweep (1.0 Sec. ON/Repeat)	0.104	0.036	0.152	0.03
HI/LO	1000/800 Hz (0.25 Sec. ON/Alternate)	0.057	0.025	0.114	0.026

For details using the DSM Sync Module refer to data sheet S3000 or Installation Instructions P83177. For wiring information on the power supply refer to Installation Instructions P84905 for PS-6/8

Wheelock products must be used within their published specifications and must be PROPERLY specified, applied, installed, operated, maintained and operationally tested in accordance with their installation instructions at the time of installation and at least twice a year or more often and in accordance with local, state and federal codes, regulations and laws. Specification, application, installation, operation, maintenance and testing must be performed by qualified personnel for proper operation in accordance with all of the latest National Fire Protection Association (NFPA), Underwriters’ Laboratories (UL), National Electrical Code (NEC), Occupational Safety and Health Administration (OSHA), local, state, county, province, district, federal and other applicable building and fire standards, guidelines, regulations, laws and codes including, but not limited to, all appendices and amendments and the requirements of the local authority having jurisdiction (AHJ).

Architects and Engineers Specifications

The audible/visual notification appliances shall be Wheelock colored lens strobe products or approved equals. These appliances shall be listed under UL Standard 1638. The amber lens shall be tested to meet UL 1971 light distribution.

The strobe appliances shall produce a minimum flash rate of 60 flashes per minute (1 flash per second) over the Regulated Voltage Range of 16 to 33 VDC and shall incorporate a Xenon flash tube enclosed in a rugged lexan lens. Strobe intensity shall be 75 candela minimum or shall be field selectable for 4 intensity levels The strobes shall operate over an extended temperature range of 32ºF to 120ºF (0ºC to 49ºC) and shall be listed for maximum humidity of 93%RH. Weatherproof strobe appliances shall operate over an extended temperature range of -31°F to +150°F (-35°C to +66°C) and maximum humidity of 95% RH.

Horn strobes shall be able to produce a continuous output or a temporal code-3 output that can be synchronized. The horns shall have 3 sound level settings of 90, 95, and 99 dBA

Speaker strobes shall be able to have field selectable input voltage of 25/70 VRMS and field selectable taps of 1/8, 1/4, 1/2, 1 and 2 watts. Weatherproof speakers shall have field selectable taps of 1/8, 1/4, 1/2, 1, 2, 4, and 8 watts.

When synchronization of strobes or temporal Code-3 audibles is required, the appliances shall be compatible with Wheelock Series DSM sync module or the Wheelock PS-6 or PS-8 Power Supplies with built-in patented Sync Protocol. The strobes shall not drift out of synchronization at any time during operation. Audibles and strobes shall be able to be synchronized on a 2-wire circuit with the capability to silence the audible if required. If the sync module or power supply fails to operate (i.e. contacts remain closed), the strobes shall revert to a non-synchronized flash rate.

NOTE: Due to continuous development of our products, specifications and offerings are subject to change without notice in accordance with Wheelock, Inc. standard terms and conditions.

Wiring Diagrams #

SERIES RSS APPLIANCE

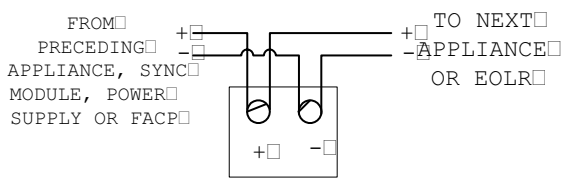

SERIES RSS APPLIANCE SYNCHRONIZED WITH SM MODULE SINGLE CLASS "B" NAC CIRCUIT

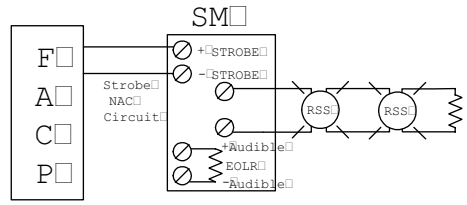

SERIES RSS APPLIANCES SYNCHRONIZED WITH DSM MODULE SINGLE CLASS "A" NAC CIRCUIT

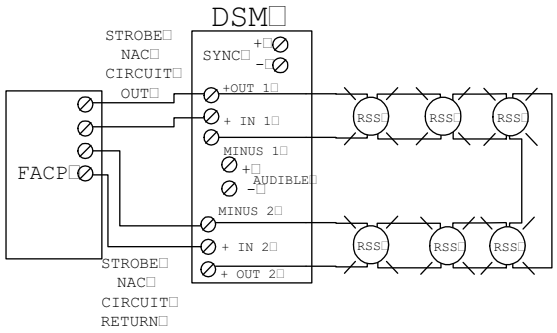

SERIES RSS APPLIANCES SYNCHRONIZED WITH MULTIPLE DSM MODULES

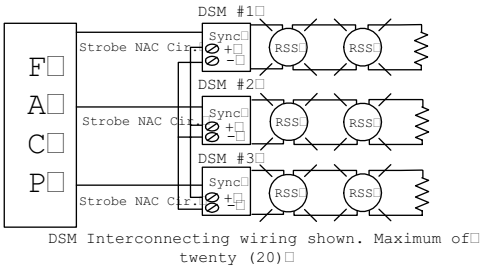

DSM Interconnecting wiring shown. Maximum of twenty (20)

NEMA Member

WE ENCOURAGE AND SUPPORT NICET CERTIFICATION
3 YEAR WARRANTY

S9020 7/2012

NJ Location
273 Branchport Ave.
Long Branch, NJ 07740
P: 800-631-2148
F: 732-222-8707
www.coopernotification.com

FL Location
7246 16th Street E, Unit 105
Sarasota FL 34243-6817
P: 941-487-2300
F: 941-487-2389

VA Location
103 West Broad Street, Suite 500
Falls Church, VA 22046
P: 877-459-7726
F: 703-294-6560

Cooper Notification is Wheelock® MEDC SAFEPATH WAVES Roam Secure

COOPER Notification