Simplex®

4098-9685, -9686, -9688, -9755, -9756
Duct Detector/Sensor
Installation Instructions



574-776
Rev. C

Cautions and Warnings

DO NOT INSTALL ANY SIMPLEX PRODUCT THAT APPEARS DAMAGED. Upon unpacking your Simplex product, inspect the contents of the carton for shipping damage. If damage is apparent, immediately file a claim with the carrier and notify Simplex.



ELECTRICAL HAZARD - Disconnect electrical power when making any internal adjustments or repairs. Servicing should be performed by qualified Simplex Representatives.



STATIC HAZARD - Static electricity can damage components. Therefore, handle as follows:

1. Ground yourself before opening or installing components.
2. Keep uninstalled component wrapped in anti-static material at all times.

NOTICE

THESE DEVICES ARE DUCT SMOKE DETECTOR/SENSORS. THEY ARE DESIGNED TO SAMPLE THE AIR FLOW PASSING BY IT IN THE AIR DUCT TO DETERMINE WHETHER IT CONTAINS UNACCEPTABLE LEVELS OF SMOKE.

THE EFFECTIVENESS OF A DUCT SMOKE DETECTOR/SENSOR IS HIGHLY DEPENDENT UPON:

- THE DESIGN AND OPERATING CONDITIONS OF THE AIR HANDLING SYSTEM IN WHICH IT IS INSTALLED;
- VARIABLES SUCH AS SMOKE DILUTION AND STRATIFICATION OVER WHICH EVEN THE BEST DESIGNED SYSTEMS HAVE NO CONTROL; AND,
- PROPER PLACEMENT AND POSITIONING OF THE DUCT SMOKE DETECTOR/SENSOR, WHICH IS OFTEN COMPROMISED FOR PRACTICAL REASONS.

FOR THE REASONS STATED ABOVE, THE EFFECTIVENESS OF THIS DUCT SMOKE DETECTOR/SENSOR CANNOT BE WARRANTEED OR GUARANTEED. UNDER NO CIRCUMSTANCES SHOULD THIS DUCT SMOKE DETECTOR/SENSOR BE USED AS OR REGARDED TO BE A SUBSTITUTE FOR THE BUILDING'S REGULAR FIRE ALARM AND DETECTION SYSTEM, TO WHICH THIS DEVICE IS ATTACHED AS A SECONDARY DETECTION DEVICE.

THE NFPA STATES THAT DUCT SMOKE DETECTORS/SENSORS MUST NOT BE USED AS SUBSTITUTES FOR OPEN AREA PROTECTION. THE DUCT SMOKE DETECTORS/SENSORS ARE INTENDED FOR USE IN THE CONTROL OF AIR HANDLING EQUIPMENT FOR THE PURPOSES OF CLOSING DAMPERS OR SHUTTING DOWN AIR HANDLING UNITS.

NOTE FOR CANADIAN APPLICATION

THE DUCT SMOKE DETECTORS AND SENSORS DESCRIBED IN THIS INSTALLATION INSTRUCTIONS CAN ONLY BE CONNECTED TO THE 2120 SYSTEMS THAT WERE LABLED PRIOR TO THE EFFECTIVE DATE OF THE CURRENT ULC STANDARD FOR CONTROL UNITS, MARCH 31, 1989, AND SUBJECT TO ACCEPTANCE BY THE AHJ.

Table of Contents

Table of Contents iii

General Description 1

Introduction 1

Setting the Duct Sensor's Address 3

Addressable Duct Sensors 4098-9755 or 4098-9756 (MAPNET II/IDNet) 3
General 3
Address Setting for the 2120 CDT System (use with 4098-9755 only) 3
Address Setting for the 4010, 4020, 4100+, or 4120 3

Electrical Specifications 6

Introduction 6
Addressable Duct Sensors 6
Addressable Duct Sensor Compatibility 6
Non-Addressable Duct Detectors 9
Two-Wire Duct Detector Compatibility 10
Accessories 11

Installation 15

Pre-Installation Routines 15
Rules to Follow 15
Duct Detector/Sensor Installation 16
Wiring Procedures 19
Accessory Installation 19
Detector/Sensor Replacement 20
DC Operation Detector Testing 20
Periodic Air Test 20
Magnetic Test for Detectors and Sensors 21
Preferred Method of Testing Smoke Detectors/Sensors 22
DC Operation Detector/Sensor Testing 23
Air Differential Pressure Test 24
Maintenance 24

Suffix "C" or "CA" following an 8-digit Product ID number denotes ULC-listed product.
MAPNET II® Communication Net is protected by U.S. Patent No. 4,796,025.
IDNet™ is a trademark of the Simplex Time Recorder Company.
TrueAlarm® Analog Detection is protected by U.S. Patent No. 5,155,468.
TrueAlarm® Detector Base is protected by U.S. Patent No. 5,173,683.

©2000 Simplex Time Recorder Company, Westminster, MA 01441-0001 U.S.A.
©2000 Simplex International Time Equipment Co., Ltd., Mississauga, Ontario L4V 1H3 Canada.
All specifications and other information shown were current as of publication, and are subject to change without notice.

General Description

Introduction

The 4098 Duct Detector/Sensors (see Figure 1) are designed to sample air and detect smoke in air ducts. The 4098 Duct Detector/Sensors are available in the following configurations:

- 4098-9685 Two-Wire Duct Detector supplied with the 4098-9601 Photoelectric Detector
- 4098-9686 Four-Wire Duct Detector supplied with the 4098-9601 Photoelectric Detector
- 4098-9688 Two-Wire Duct Detector with Relay Drive supplied with the 4098-9601 Photoelectric Detector
- 4098-9755 Two-Wire Duct Sensor supplied with the 4098-9714 Photo Smoke Sensor
- 4098-9756 Four-Wire Duct Sensor supplied with the 4098-9714 Photo Smoke Sensor

The 4098-9685, 4098-9686, and 4098-9688 Duct Detectors have a red LED on the detector for “POWER ON” indication (red LED flashing) or for “ALARM” indication (red LED “ON” steady).

The 4098-9755 and 4098-9756 Duct Sensors have a red LED on the PCB assembly for “POWER ON” indication (red LED flashing) or for “ALARM” or “TROUBLE” indication (red LED “ON” Steady).

The 4098-9686 Four-Wire Duct Detector and 4098-9756 Four-Wire Duct Sensor have a yellow LED that indicates an short or open condition on the supervised control zone (yellow LED “ON” steady), a trouble is also reported to the panel during a short or open condition.

The 4098-9686 and 4098-9756 provide a supervised control circuit to drive up to fifteen (15) remote 4098-9843 relays for alarm, supervisory, and control functions. The 4098-9688 Two-Wire Duct Detector provides a supervised relay control output that can drive one (1) 4098-9841 remote relay.

For detailed information on using smoke detectors/sensors in air distribution systems, see NFPA 90A.

Continued on next page

General Description, *Continued*

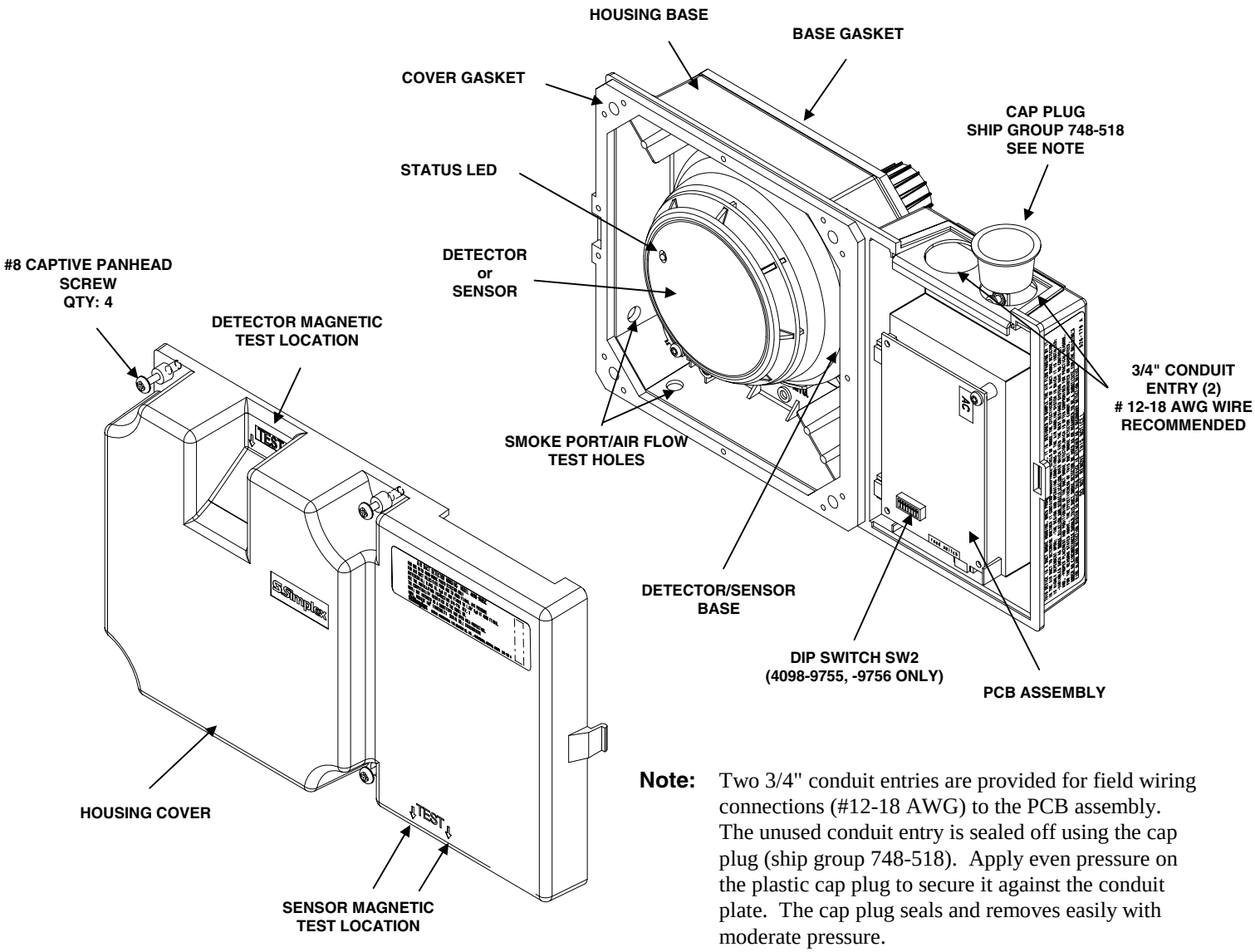

Note: Two 3/4" conduit entries are provided for field wiring connections (#12-18 AWG) to the PCB assembly. The unused conduit entry is sealed off using the cap plug (ship group 748-518). Apply even pressure on the plastic cap plug to secure it against the conduit plate. The cap plug seals and removes easily with moderate pressure.

Figure 1. Duct Housing Components

Setting the Duct Sensor's Address

Addressable Duct Sensors 4098-9755 or 4098-9756 (MAPNET II/IDNet)

The procedures that follow are used to install the 4098-9755 or 4098-9756 addressable duct sensors. See Figure 1 for the location of the duct sensor DIP switches. The instructions provided show how to set the address at each sensor and also how to make electrical connections. Addressable smoke duct sensors are connected to a 2120 Multiplex Communicating Device Transponder (CDT), 4010 Fire Alarm Panel, 4020 Fire Alarm Panel, 4100+ Fire Alarm Panel, or 4120 Fire Alarm Panel by a single twisted-shielded wire pair (MAPNET II/IDNet).

General

Duct sensor addressing is critical since the 2120 Communicating Device Transponder (CDT), 4010, 4020, 4100+, and 4120 Systems report alarms and troubles per duct sensor rather than per zone. Each duct sensor has a unique address. This address is associated with a custom label which identifies its physical location within a building. The duct sensor's address and location must match up with the address listed in the specification sheets of the 2120 Job Configuration Report or Programmer's Report for the 4010, 4020, 4100+, or 4120 System. You should have the appropriate specification sheets with you during this part of the installation.

Address Setting for the 2120 CDT System (use with 4098-9755 only)

1. Using the 2120 Job Configuration Report, find the entry for the duct sensor you are about to install. The CUSTOM LABEL column provides the location while the DEVICE ADDRESS column provides the switch setting data.
2. Using the switch setting data for the duct sensor you are installing set the duct sensor's address using Figure 3. Loosen the four screws securing the clear plastic cover to the housing base. Locate the DIP switch on the duct sensor's PCB assembly in the wiring compartment (see Figure 1). Use a small screwdriver or pen to set the switches.

   For the switch setting data in the DEVICE ADDRESS column, "1" is switch ON while "0" is switch OFF.
3. Recheck the location of the sensor and its address before electrical installation. Mark an address label with the appropriate address for your duct sensor by shading a label box for each sensor DIP switch in the ON position. Then apply the label to the sensor near the sensor's DIP switches.
4. Secure the duct sensor's clear plastic cover to the housing using the four screws (**Torque screw to 8-10 inch-pounds**).

Address Setting for the 4010, 4020, 4100+, or 4120

1. Using the System Point Summary for the 4010, 4020, 4100+, or 4120, find the entry for the duct sensor you are about to install. The ZONE NAME (with a "M" prefix) and CUSTOM LABEL are located in the SYSTEM POINT SUMMARY.

   For example, Address M1-7 (for the 4010, 4100+, or 4120 System) is shaded in Figure 2. M1 is the addressable channel while -7 is the device address on the channel. For a duct sensor with Address M1-7, address 7 must be set on the duct sensor's DIP switches. Address 7 is illustrated in Figure 3.

Continued on next page

Address Setting for the 4010, 4020, 4100+, or 4120
(continued)

2. Using the example given in Step 1 as a guideline, set the duct sensor's address using Figure 3. Loosen the four screws securing the clear plastic cover to the housing base. Locate the DIP switch on the duct sensor's PCB assembly in the wiring compartment (see Figure 1). Use a small screwdriver or pen to set the switches.

3. Recheck the location of the sensor and its address before electrical connection. Mark an address label with the appropriate address for your duct sensor by shading a label box for each sensor DIP switch in the ON position. Then apply the label to the sensor near the sensor's DIP switch.

4. Secure the duct sensor's clear plastic cover to the housing using the four screws (**Torque screw to 8-10 inch-pounds**).

4020 System

DOCUMENTATION SYSTEM POINT SUMMARY Page 4
9304100A node: 1 rev: 1 10:50:20, WED, 15-JAN-97

System Point Summary (ascending by zone name) : Point Summary Zone

Zone Name	Custom Label	Device Type	Point Type	PNIS Code
IO1	MULTI IO CARD 1 POINT IO1	PULL	MONA	
IO2	MULTI IO CARD 1 POINT IO2	PULL	MONA	
IO3	MULTI IO CARD 1 POINT IO3	SSIGNAL	SIGA	
IO4	MULTI IO CARD 1 POINT IO4	SSIGNAL	SIGA	
M1-1	COMPUTER LAB BLDG 21	VSMOKE	ION	
M1-2	3RD FLOOR EAST WING ROOM 18	SMOKE	GENIAM	
M2-1	2ND FLOOR WEST WING ROOM 12	SMOKE	ADRDET	
IO9	BASEMENT EAST WING ROOM 3 IO9	SFPUMP	MONA	

DEVICE ADDRESS

4010, 4100+, or 4120 SYSTEM

DOCUMENTATION SYSTEM POINT SUMMARY Page 2
9304100A node: 1 rev: 1 16:32:47, WED, 15-JAN-98

System Point Summary (ascending by zone name) : Point Summary Zone

Zone Name	Custom Label		Device Type	Point Type	PNIS Code
M1-1	FIRST FLOOR MICROWAVE ROOM	M1-1	ADRPUL	PULL	
M1-2	FIRST FLOOR DINING ROOM	M1-2	ADRPUL	PULL	
M1-3	FIRST FLOOR LOBBY	M1-	ADRPUL	PULL	
M1-4	FIRST FLOOR MECHANICAL ROOM 2	M1-4	ADRPUL	PULL	
M1-5	FIRST FLOOR LOADING DOCK	M1-5	ADRPUL	PULL	
M1-6	1ST FLR MECH RM 1	M1-6	PHOTO	VSMOKE	
M1-7	**1ST FLR MECH RM 1**	**M1-7**	**DUCT**	**PHOTO**	

DEVICE ADDRESS

Figure 2. System Point Summaries with MAPNET II/IDNet Address

Continued on next page

Setting the Duct Sensor's Address, *Continued*

4010, 4020, 4100+, OR 4120 USE ONLY

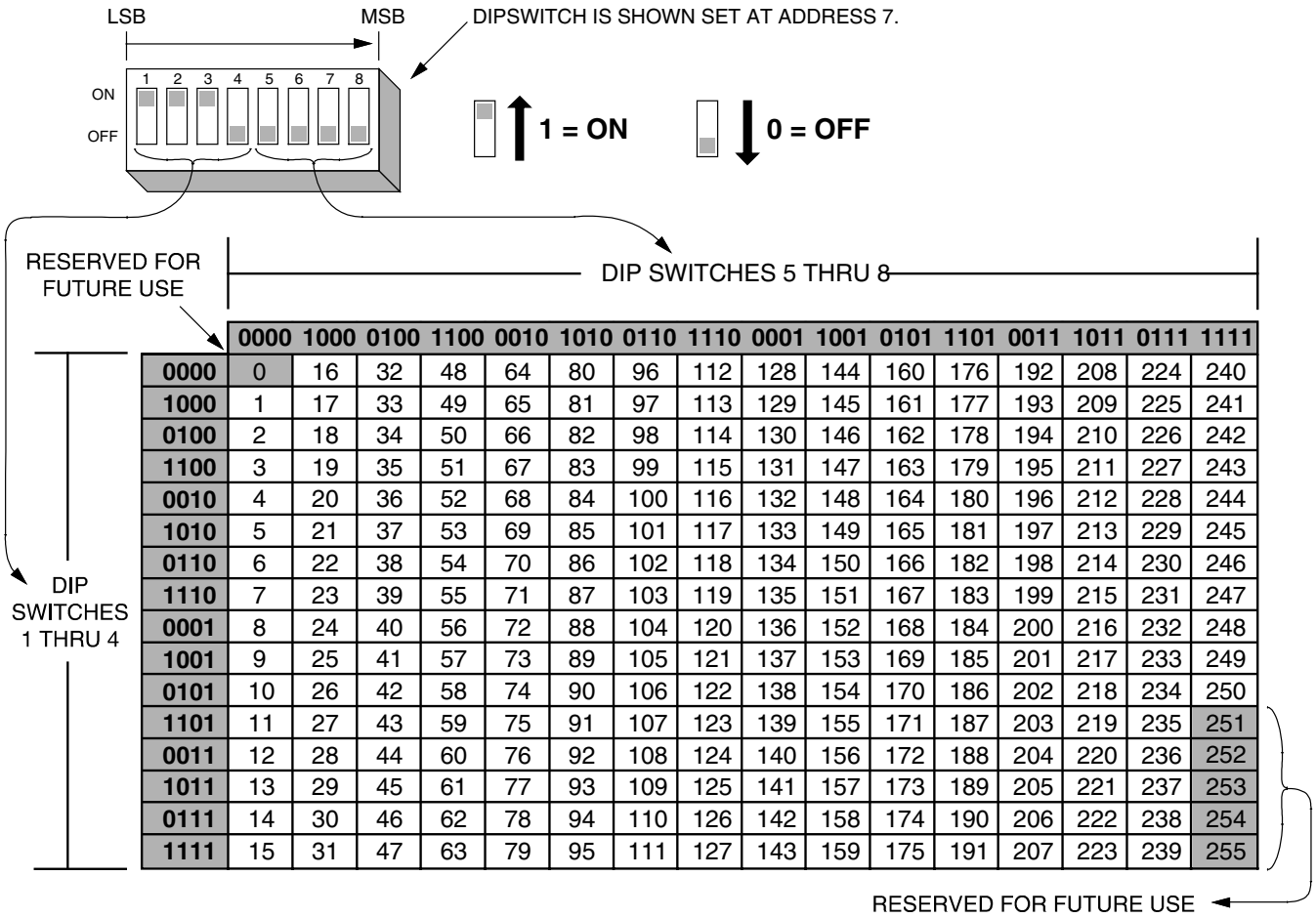

	0000	1000	0100	1100	0010	1010	0110	1110	0001	1001	0101	1101	0011	1011	0111	1111
0000	0	16	32	48	64	80	96	112	128	144	160	176	192	208	224	240
1000	1	17	33	49	65	81	97	113	129	145	161	177	193	209	225	241
0100	2	18	34	50	66	82	98	114	130	146	162	178	194	210	226	242
1100	3	19	35	51	67	83	99	115	131	147	163	179	195	211	227	243
0010	4	20	36	52	68	84	100	116	132	148	164	180	196	212	228	244
1010	5	21	37	53	69	85	101	117	133	149	165	181	197	213	229	245
0110	6	22	38	54	70	86	102	118	134	150	166	182	198	214	230	246
1110	7	23	39	55	71	87	103	119	135	151	167	183	199	215	231	247
0001	8	24	40	56	72	88	104	120	136	152	168	184	200	216	232	248
1001	9	25	41	57	73	89	105	121	137	153	169	185	201	217	233	249
0101	10	26	42	58	74	90	106	122	138	154	170	186	202	218	234	250
1101	11	27	43	59	75	91	107	123	139	155	171	187	203	219	235	251
0011	12	28	44	60	76	92	108	124	140	156	172	188	204	220	236	252
1011	13	29	45	61	77	93	109	125	141	157	173	189	205	221	237	253
0111	14	30	46	62	78	94	110	126	142	158	174	190	206	222	238	254
1111	15	31	47	63	79	95	111	127	143	159	175	191	207	223	239	255

Note: The 4020, 4100+, and 4120 systems support up to 127 devices on each of their MAPNET II channels. The 4010 supports up to 250 devices on its IDNet channel.

Figure 3. 4010, 4020, 4100+, 4120 MAPNET II/IDNet Address Chart

Electrical Specifications

Introduction

Addressable duct sensors are connected to a 2120 CDT (4098-9755 only), 4010, 4020, 4100+, or 4120 Fire Alarm System by twisted pair-wire (MAPNET II/IDNet). The duct sensor obtains both power and data over this wire pair. (Shielded twisted pair-wire for the MAPNET II/IDNet circuit is recommended; if not shielded or twisted, consult Simplex Sales Engineering.) For relay operation (4098-9756 only), a separate 24VDC source of power is required in addition to the MAPNET II/IDNet lines. Refer to Table 1 for duct sensor compatibility.

Note: The 24VDC power source must originate from a fused power supply listed for fire protection signaling use, or from the Fire Alarm Control Panel (FACP) power supply.

Addressable Duct Sensors

4098-9755 Two-Wire Duct Sensor Electrical Specifications - MAPNET II/IDNet Operation (Figure 4, Page 7)

MAPNET II/IDNet Power

- MAPNET II/IDNet Input Voltage - 24 to 40VDC
- MAPNET II/IDNet Current - 400uA Typical

4098-9756 Four-Wire Duct Sensor Electrical Specifications - MAPNET II/IDNet Operation with 24VDC Power for Relay Control (Figure 5, Page 8)

MAPNET II/IDNet Power

- MAPNET II/IDNet Input Voltage - 24 to 40VDC
- MAPNET II/IDNet Current - 400uA Typical (800uA when relay is activated [in alarm])

24VDC Power

- Input Voltage - 18 to 32VDC
- Average Supervisory Current – 3mA
- Alarm Current – 15mA maximum
- Compatible Remote Relay (Maximum of 15 relays) – 4098-9843 (Air Products & Controls PAM-SD), add 15mA to alarm current for each relay used
- Remote Relay coil connections supervised
- Remote Relay contacts rated 7 amps at 28VDC/10 amps at 115VAC resistive, non-power limited

Addressable Duct Sensor Compatibility

Table 1. 4098 Duct Sensor Compatibility

DUCT SENSOR	MAXIMUM QUANTITY OF DEVICES PER CIRCUIT
4098-9755 Two-Wire Duct Sensor	127 Devices (4020, 4100+, 4120) Addresses 1 - 127 128 Devices (2120 CDT) Addresses 0 – 128 250 Devices (4010) Addresses 1 – 250
4098-9756 Four-Wire Duct Sensor	127 Devices (4020, 4100+, 4120) Addresses 1 - 127 250 Devices (4010) Addresses 1 – 250

Notes:

1. For detailed interconnection data, see wiring diagrams for specific panels.
2. Panel compatibility identification marker is model number of the module or panel.
3. Sensor compatibility identification marker is model number found on duct sensor label.

Continued on next page

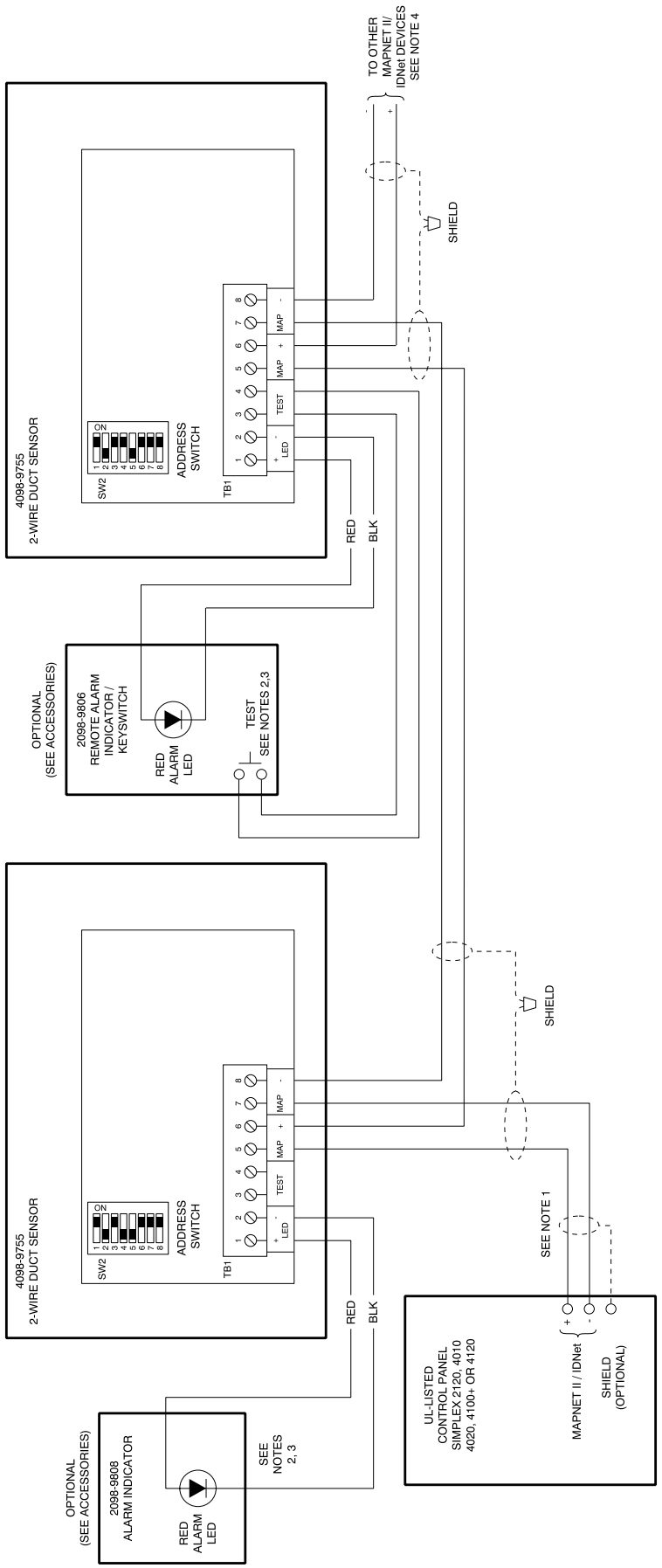

Notes:

1. Duct Sensor wiring is 12 to 18 AWG.
2. Maximum wire length to test terminals and remote LED is 250 feet.
3. The 2098-9806 and 2098-9808 are polarized, observe color-coded wiring.
4. Maximum quantity of devices per circuit is 127 for 4020, 4100+, or 4120, 128 for the 2120 CDT panel, and 250 for the 4010 panel.

Figure 4. 4098-9755 Two-Wire Duct Sensor MAPNET II/IDNet Operation

Continued on next page

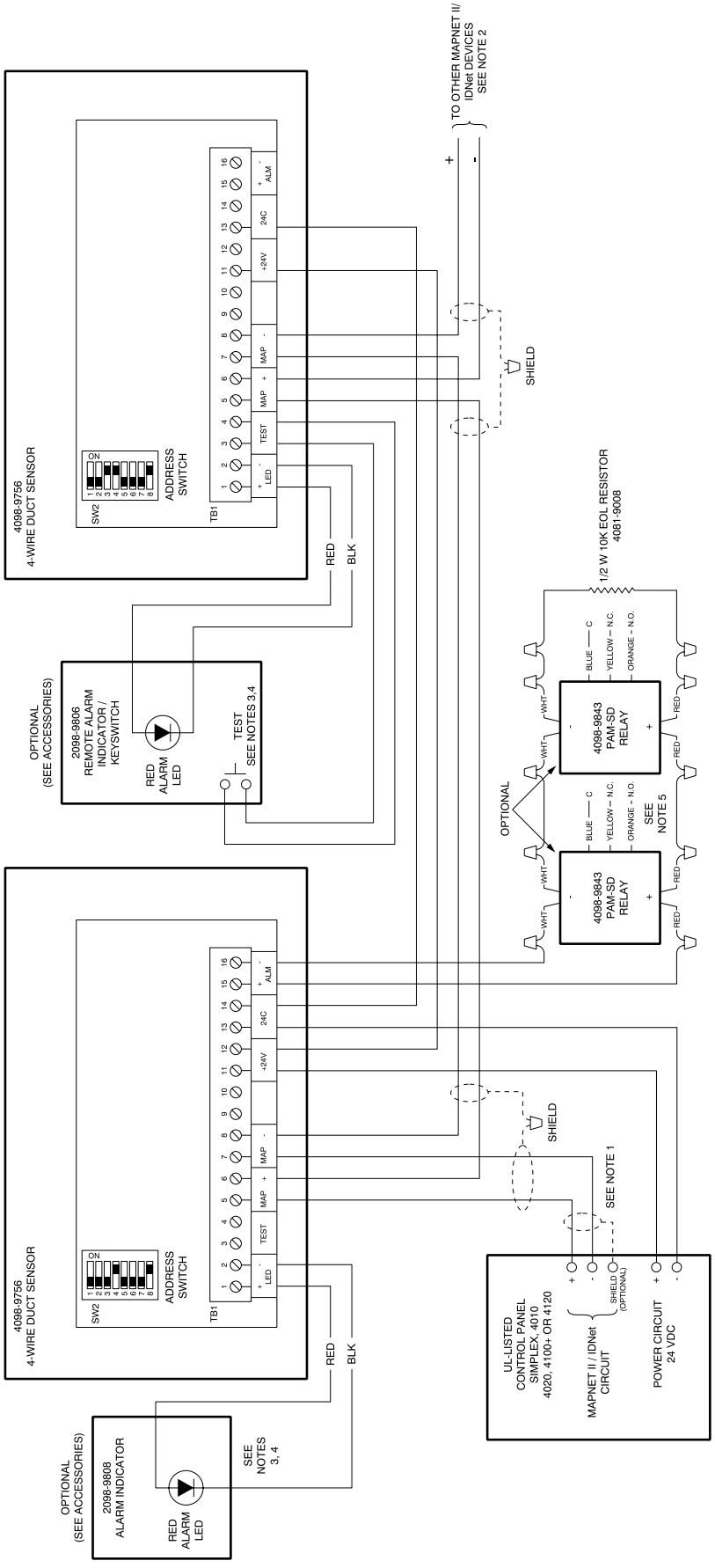

Notes:

1. Duct Sensor wiring is 12 to 18 AWG.
2. Maximum quantity of devices per circuit is 127 for 4020, 4100+, or 4120, and 250 for the 4010 panel.
3. The 2098-9806 and 2098-9808 are polarized, observe color-coded wiring.
4. Maximum wire length to test terminals and remote LED is 250 feet.
5. 4098-9843 PAM-SD Relay (Air Products & Controls Limited) are rated at 7 amps 28VDC/10 amps @ 115VAC. Maximum wire length to PAM-SD Relays is 500 feet (Fifteen PAM-SD Relays maximum). Wiring from the relay to the device it is controlling should be no more than 3 feet (per NFPA 72).

Figure 5. 4098-9756 Four-Wire Duct Sensor MAPNET II/IDNet Operation with 24VDC Power for Relay Control

Continued on next page

Non-Addressable Duct Detectors

Note: Refer to Table 2 for 4098-9685 and 4098-9688 duct detector compatibility.

4098-9685 Duct Detector Electrical Specifications - Two-Wire DC Operation (Figure 6, Page 12)

- Input Voltage - 15 to 32VDC, polarized
- Standby Current - 100uA at 24VDC maximum
- Alarm Current - 40mA at 24VDC maximum

4098-9688 Duct Detector Electrical Specifications - Two-Wire DC Operation with Remote Relay Control (Figure 7, Page 13)

Caution: Connect only one Duct Detector to a two-wire circuit. Cannot be used with the 4004 and 4005 Low current Initiating Device Circuits (IDCs).

Relay control activates upon alarm initiating control functions.

- Input Voltage - 15 to 32VDC, polarized
- Standby Current – 2.0mA at 24VDC maximum
- Alarm Current - 40mA at 24VDC maximum
- Compatible Remote Relay: 4098-9841 Remote Relay
- Remote Relay coil connections supervised, 100 feet maximum
- Remote relay contacts rated 1 amp at 28VDC; or ½ amp at 120VAC resistive, non-power-limited.

Note: Removing detector from the housing, failure of the 24VDC supply power, or an open or short circuit on the relay control output causes the Duct Interface Board to open its IDC connection resulting in a trouble condition at the control panel.

4098-9686 Duct Detector Electrical Specifications - Four-Wire DC Operation with Remote Relay Control (Figure 8, Page 14)

The 4098-9686 Four-Wire Duct Detector has a supervised zone to control up to fifteen 4098-9843 Remote Relays (PAM-SD Relay – Manufacturer "Air Products & Controls Ltd.) for initiating or control functions.

- Input Voltage - 21 to 29VDC (absolute rating of 18 to 32VDC), polarized
- Standby Current – 12mA at 24VDC maximum
- Alarm Current - 60mA at 32VDC maximum
- Compatible Remote Relay – 4098-9843 (Air Products & Controls PAM-SD), add 15mA to alarm current for each relay used.
- Remote Relay coil connections supervised, 500 feet maximum
- Remote Relay contacts rated 7 amps at 28VDC/10 amps at 115VAC resistive, non-power limited
- Add 20mA to standby and alarm current if 4098-9835 Remote Alarm/Power Indicator/Key Switch is used

Notes:

1. Removing detector from the housing, failure of the 24VDC supply power, or an open or short circuit on the relay control output causes the Duct Interface Board to open its IDC connection resulting in a trouble condition at the control panel.
2. The 24VDC power source must originate from a fused power supply listed for fire protection signaling use, or from the Fire Alarm Control Panel (FACP) power supply.

Continued on next page

Two-Wire Duct Detector Compatibility

Table 2. 4098 Two-Wire Duct Detector Compatibility.

DUCT DETECTOR	SYSTEM	MAXIMUM QUANTITY OF DETECTORS PER INITIATING CIRCUIT
4098-9685 Two-Wire Duct Detector	2120 ET/FADM	25
	2120 FABT/VPBT	18
	2120/4100+ ZAM	20
	4001	18
	4002	30
	4020	30
	4100+/4120/UT	30
	4004/4005	20
	4004/4005 High Current	30
4098-9688 Two-Wire Duct Detector with Relay Control (See Note 1)	4002	1
	4020	1
	4100+/4120/UT	1
	4004/4005 High Current (4098-9688 not used with 4004 & 4005 Low Current systems)	1

Notes:

1. Relay operation cannot be guaranteed unless it is the only device on that zone.
2. Panel compatibility identification marker is model number of the module or panel.
3. Detector compatibility identification marker is model number found on duct detector label.
4. For detailed interconnection data, see wiring diagrams for specific panels.

Continued on next page

Accessories

Accessory installation instructions are provided on Page 19 of this publication.

Remote Alarm Indicator - Model 2098-9808 (Use with 4098-9755 or 4098-9756) or Model 4098-9830 (Use with 4098-9685, 4098-9688, or 4098-9686)



- Red LED indicator ON when detector/sensor is in alarm
- LED Alarm Current - 1.2mA Nominal

Remote Alarm Indicator/Key Switch - Model 2098-9806 (Use with 4098-9755 or 4098-9756) or Model 4098-9834 (Use with 4098-9685, 4098-9688, or 4098-9686)



- Red LED indicator ON when detector/sensor is in alarm. Key switch activates alarm relay 4098-9756, 4098-9688, or 4098-9686 only), remote LED, and puts the detector/sensor into alarm
- LED Alarm Current - 1.2mA Nominal

Remote Power/Alarm Indicator/Key Switch - Model 4098-9835 (Use with four-wire 4098-9686)

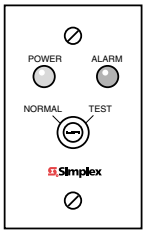

- Green LED indicator glows with power ON
- Red LED indicator ON when detector is in alarm
- Key Switch activates alarm relay, remote LED, and puts the detector into alarm
- Standby Current - 20mA (green LED) at 24VDC Nominal
- LED Alarm Current - 1.2mA (red LED) Nominal

Note: Maximum wire length to test terminals and remote LED is 250 feet.

Continued on next page

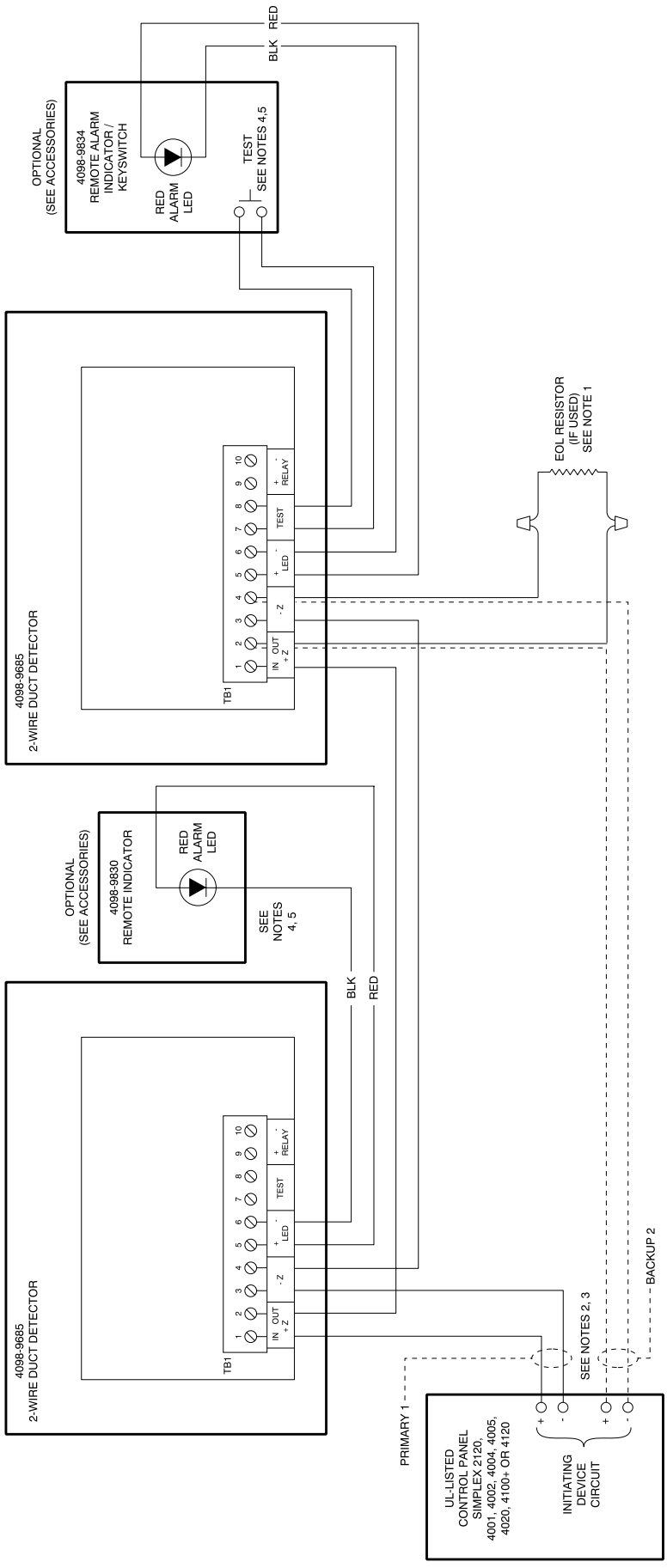

Notes:

1. For Style D initiating device circuit, wire per dotted lines and do not use EOL resistor. If Style B initiating device circuit, refer to drawings provided with the system panel for proper EOL resistor value.
2. It is recommended that the primary 1 and backup 2 lines be in separate wire runs and in compliance with local requirements.
3. Duct Detector wiring is 12 to 18 AWG. For additional wiring information, refer to wiring diagrams supplied with the system panel.
4. The 4098-9834 and 4098-9830 are polarized; observe color coded wiring.
5. Maximum wire length to test terminals and remote LED is 250 feet.

Figure 6. 4098-9685 Two-Wire Duct Detector DC Operation

Continued on next page

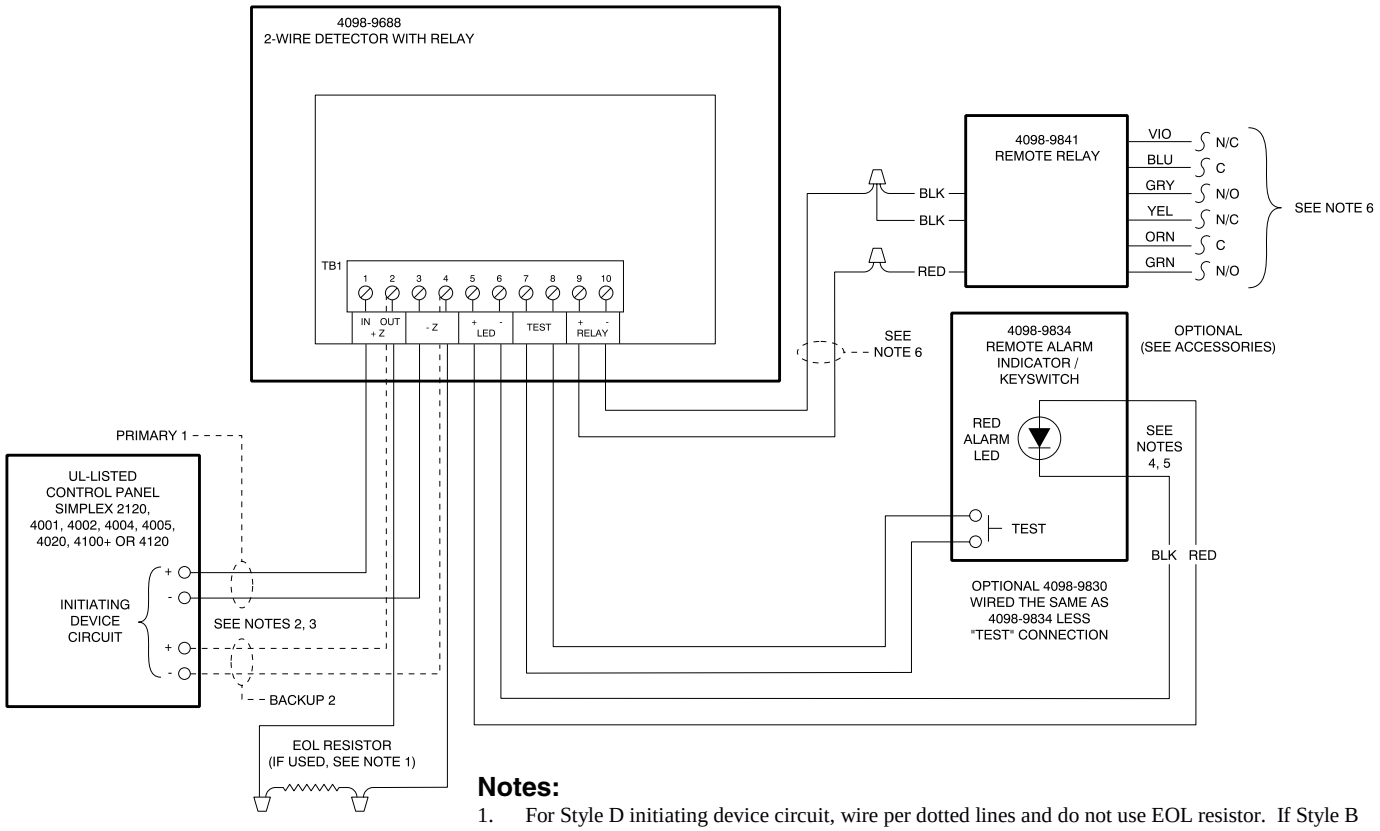

Notes:

1. For Style D initiating device circuit, wire per dotted lines and do not use EOL resistor. If Style B initiating circuit, refer to drawings provided with the system panel for proper EOL resistor value.
2. It is recommended that the primary 1 and backup 2 lines be in separate wire runs and in compliance wit local requirements.
3. Duct Detector wiring is 12 to 18 AWG. For additional wiring information, refer to wiring diagrams supplied with the system panel.
4. The 4098-9834 or 4098-9830 are polarized; observe color coded wiring.
5. Maximum wire length to test terminals and remote LED is 250 feet.
6. 4098-9841 Remote Relay contacts are rated at 1 amp at 28VDC/0.5 amp at 125VAC, resistive, non-power limited. Wiring from the relay to the device it is controlling should be no more than 3 feet (per NFPA 72).

Figure 7. 4098-9688 Two-Wire Duct Detector DC Operation with Remote Relay Control

Continued on next page

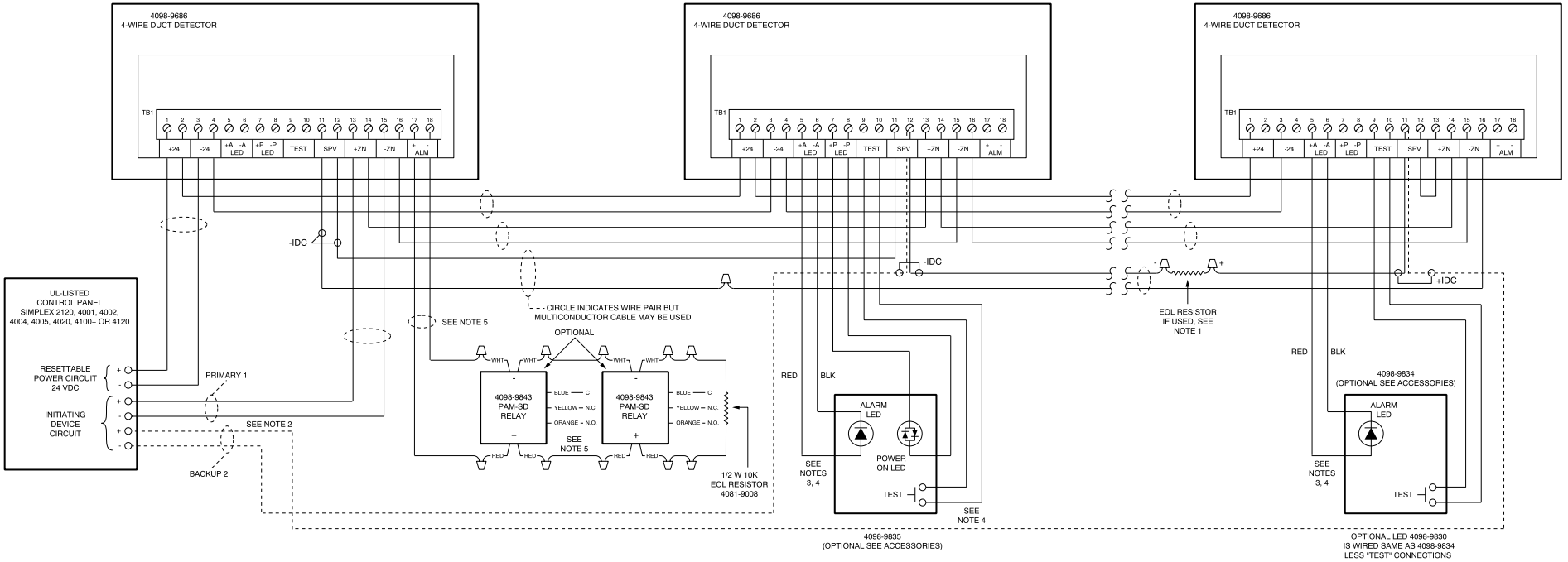

Notes:

1. For Style D initiating device circuit, wire per dotted lines and do not use EOL resistor. If Style B initiating device circuit, refer to drawings provided with the system panel for proper EOL resistor value.
2. It is recommended that the primary 1 and backup 2 lines be in separate wire runs and in compliance with local requirements. Duct Detector wiring is 12 to 18 AWG. For additional wiring information, refer to wiring diagrams supplied with the system panel.
3. The 4098-9830, 4098-9834, and 4098-9835 are polarized; observe color coded wiring.
4. Maximum wire length to test terminals and remote LED is 250 feet.
5. 4098-9843 PAM-SD Relay (Air Products & Controls Limited) are rated at 7 amps 28VDC/10 amps @ 115VAC. Maximum wire length to PAM-SD Relays is 500 feet (Fifteen PAM-SD Relays maximum). Wiring from the relay to the device it is controlling should be no more than 3 feet (per NFPA 72).

Figure 8. 4098-9686 Four-Wire Duct Detector DC Operation with Remote Relay Control

Continued on next page

Installation

Pre-Installation Routines

The 4098-9685, 4098-9686, 4098-9688, 4098-9755 or 4098-9756 Duct Detector/Sensor should be installed in a location of relatively nonturbulent air flow and within the intended operating velocity range of 300-4000 feet-per-minute (91 to 1220 M/min.).

Simplex recommends measurements of air flow and examination of engineering specifications that define expected duct air velocities under all conditions. This is done to determine if a location is suitable for duct detector/sensor operation. An Alnor Instrument Co. (Chicago) Model 6000P Velometer or equivalent (not supplied) may be used to check the duct air velocity.

Rules to Follow

1. It is recommended to locate detectors/sensors a minimum of six duct widths downstream from bends or inlets. Such locations ensure that air flow is non-turbulent and that smoke is properly mixed with air in the duct for maximum detector/sensor efficiency. See Figures 9 and 10.

Note: Installation of a duct detector/sensor to a round duct is the same as shown in Figures 9 and 10 as long as the round duct is 18 inches or larger (45.7 cm) in diameter.

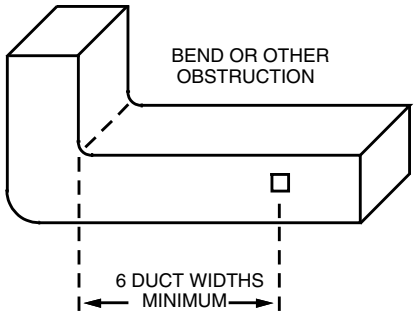

Figure 9. Duct Housing Placement - Location of Bends or Inlets

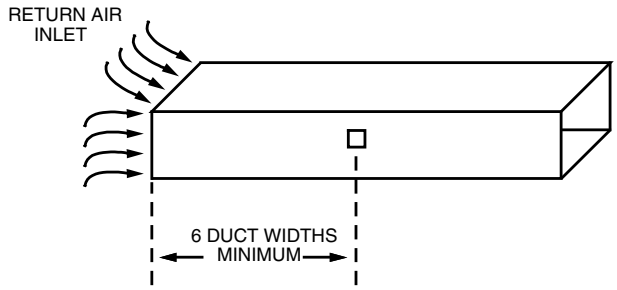

Figure 10. Duct Housing Placement - Location of Air Return Inlet

2. Locate duct housings so that dampers do not restrict air flow at the detector/sensor location. See Figure 11.

3. Locate air duct detectors/sensors on the return or supply duct of the equipment's air handling system. However, detectors/sensors should NOT be installed in the return air damper branch. See Figure 11.

Continued on next page

Rules to Follow *(continued)*

4. Locate air duct detectors/sensors on branch lines if close identification of the alarm source is required.

5. Locate air duct detectors/sensors on the *downstream side* of filters to sense fire in filters. However, should the filters block, sufficient air flow may not be available for proper air duct detector/sensor operation. See Figure 11.

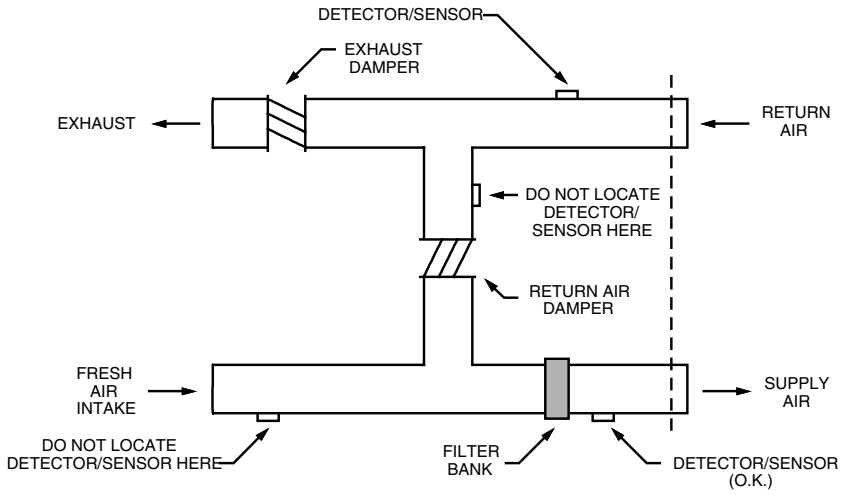

Figure 11. Duct Housing Placement - Location of Dampers

6. Whenever possible, locate air duct detectors/sensors where they can be conveniently observed and readily serviced.

7. Locate the air duct detectors/sensors in return air ducts *ahead* of mixing areas.

8. Do not locate air duct detectors/sensors next to outside air inlets unless you want to monitor smoke entry to the handling system from an adjacent area.

9. Locate air duct detectors/sensors upstream of air humidifiers and cooling coils.

Duct Detector/Sensor Installation

1. Tape the template (Figure 18) on the duct surface as shown in Figure 12.

Note: Do not position the Template with edges angled with respect to air flow direction (Figure 12).

2. Drill two 1 1/4 inch (31.75 mm) holes (marked “A” in Figure 18) as located by the template. Remove template after holes have been drilled.

3. If the duct is more than 3 feet (0.9 m) wide, then punch a 1-inch (25.4 mm) hole in the duct wall directly opposite the upstream 1 1/4 inch (31.75 mm) hole. See Figure 13. This hole is used to support the inlet tube.

Continued on next page

Duct Detector/Sensor Installation, *(continued)*

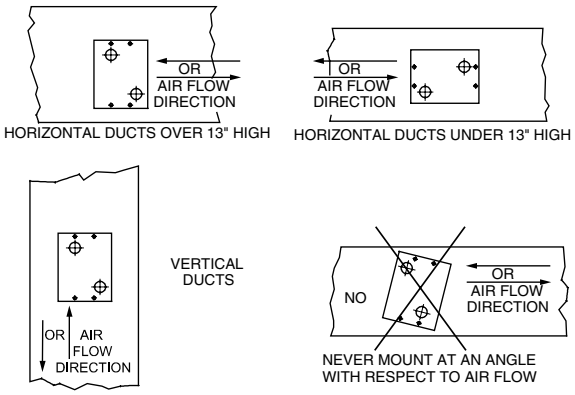

Figure 12. Template Positioning

Inlet Tube Selection

4. Inlet tubes should be selected and cut to length as specified in Table 3. After trimming the inlet tube opposite the slot, tap rubber plug (supplied) into the trimmed end. See Figure 13.

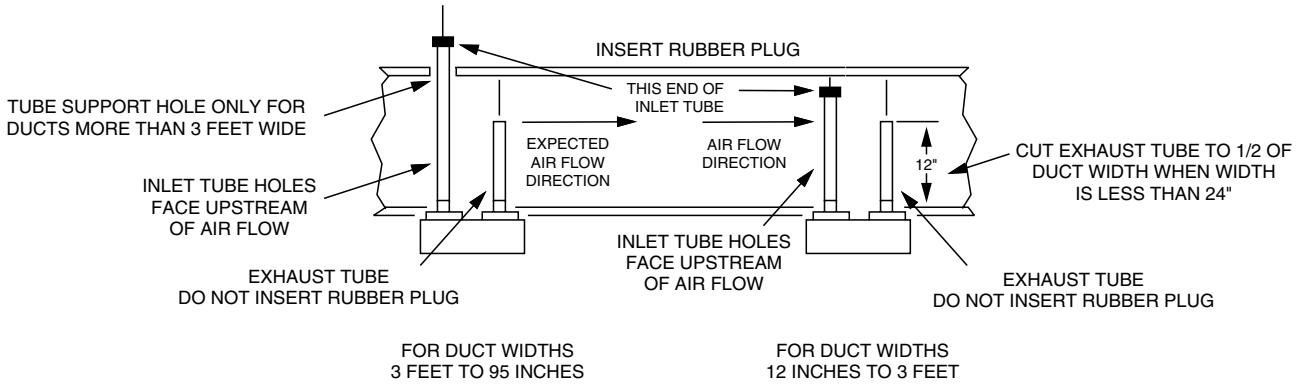

Figure 13. Inlet Tube Orientation (Mounting Position 2 – See Figure 18)

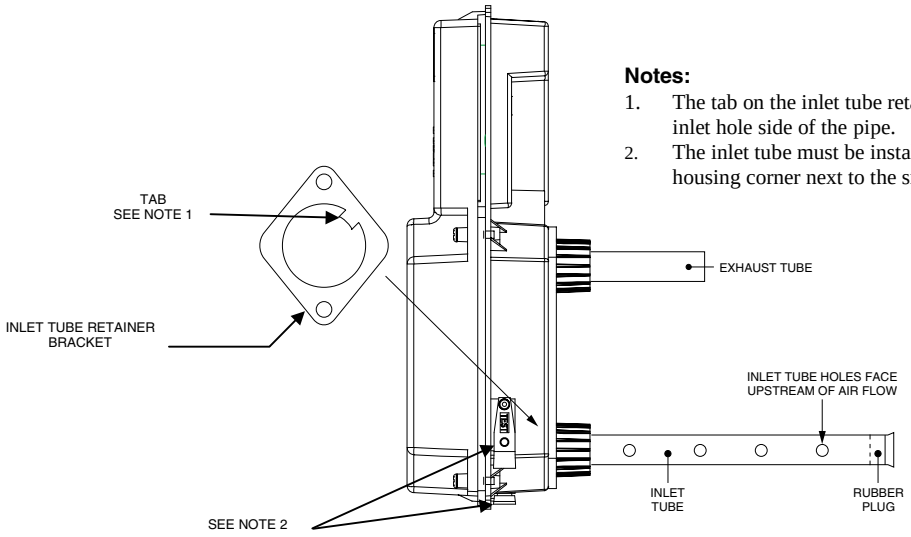

Notes:

1. The tab on the inlet tube retainer bracket indicates the inlet hole side of the pipe.
2. The inlet tube must be installed through the hole in the housing corner next to the smoke port/air flow test holes.

Figure 14. Inlet Tube Installation

Continued on next page

Duct Detector/Sensor Installation, *(continued)*

Table 3. Inlet Tube Selection

OVERALL DUCT WIDTH	TUBE REQUIRED	TUBE TYPE	SUGGESTED TOTAL LENGTH
12 inches (30 cm)	2098-9796	Hole 13 inches (33.02. cm)	½ inch (1.27 cm) longer than duct width
13 inches (33.02 cm) to 23 inches (58 cm)	2098-9804	Hole 24 inches (60.96 cm)	½ inch (1.27 cm) longer than duct width
24 inches (60 cm) to 46 inches (1.16 m)	2098-9797	Hole 49 inches (125.46 cm)	2 inches (5.8 cm) longer than duct width
46 inches (1.16 m) to 71 inches (1.8 m)	2098-9798	Hole 73 inches (1.85 m)	2 inches (5.8 cm) longer than duct width
71 inches (1.8 m) to 95 inches (2.4 m)	2098-9799	Hole 97 inches (2.45 m)	2 inches (5.8 cm) longer than duct width

Housing Installation

5. Insert the inlet and exhaust tube receptors of the housing base into the two holes previously cut in the duct.

6. Using the four # 8 self-tapping sheet metal screws provided in the accessory kit, locate the four mounting hole locations that are marked inside on the duct housing plastic (Detector Chamber marked "MTG"). Drill the four self-tapping screws through the housing plastic and duct sheet metal to secure the duct housing (no pre-drilling is required). **Torque screws 10-12 inch-pounds.**

Inlet Tube Installation (See Figures 13 and 14)

7. Install the inlet tube by inserting the rubber plug end of the tube into the upstream tube receptor located in the rear of the duct housing. The inlet tube must be installed through the hole in the housing corner next to the smoke port/air flow test holes. Place the tube retainer (supplied) over the inlet tube so that the tab on the tube retainer goes into the slot on the inlet tube. Make sure the tube retainer is in the proper orientation so that the holes in the inlet tube face upstream into the airflow. The tab on the inlet tube retainer bracket indicates the inlet hole side of the pipe.

Note: If a support hole is being used, be sure to insert the inlet tube through the hole on the far side of the duct.

8. Fasten the tube retainer using two #8 machine screws.

Notes:
1. Be sure to securely tighten the #8 machine screws to prevent accidental turning of the tube within the receptor. **Torque screws 16-18 inch-pounds**.
2. If the inlet protrudes through the far side of the duct, seal the opening around the tube (on the outside of the duct) with duct sealant.

Exhaust Tube Installation (See Figures 13 and 14)

9. Install the exhaust tube into the downstream receptor of the duct housing base. Place the inlet tube retainer bracket (supplied) over the exhaust tube so that the tab on the tube retainer goes into the slot on the exhaust tube.

10. Fasten the tube retainer using two #8 machine screws.

Note: Be sure to securely tighten the #8 machine screws. **Torque screws 16-18 inch-pounds.**

Continued on next page

Wiring Procedures

If conduit is required, route conduit to the most convenient knockout and secure to the assembly using suitable fittings.

Note: The unused conduit entry is sealed off using the cap plug (included with ship group 748-518). Apply even pressure on the plastic cap plug to secure it against the conduit plate. The cap plug seals and removes easily with moderate pressure.

Connect wires to the appropriate terminals within the duct housing in accordance with the system wiring diagram and the appropriate typical installation diagram.

Perform all wiring in accordance with the requirements of the National Electric Code® and local codes.

Connect the optional accessory as specified in the following paragraph and the associated installation and wiring diagrams.

Note: Only one remote indicator may be connected to each 4098-9685, 4098-9686, 4098-9688, 4098-9755, or 4098-9756.

Accessory Installation

The 2098-9806, 2098-9808, 4098-9830, 4098-9834, and 4098-9835 accessories are intended for installation to a standard 2-inch x 3-inch outlet box having a depth of at least two inches. See Figure 15 for details. Make wiring connections in accordance with the installation wiring diagram prior to attaching accessory to the box.

Note: Maximum wire length to test terminals and remote LED is 250 feet.

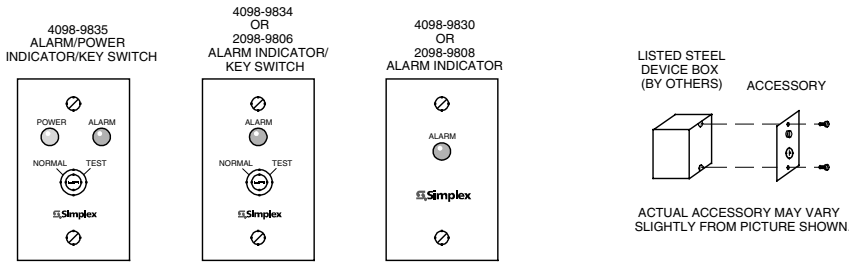

Figure 15. Accessory Installation

Continued on next page

Detector/Sensor Replacement

To properly remove and replace the detector/sensor to the base (see Figure 1):

1. Remove power from the Duct Detector/Sensor.
2. Loosen the four screws that secure the clear plastic cover to the housing base.
3. Insert a small blade screwdriver into the lock release slot in the base. Rotate the detector/sensor counterclockwise to remove it from the base.
4. Remove dust cover from the replacement detector/sensor.
5. Insert the detector/sensor into the base and rotate until fully seated, continue rotation until lock has been engaged.
6. Secure the clear plastic cover to the housing using the four screws (**Torque screws to 8-10 inch-pounds**).

Note: An audible "snap" indicates proper contact engagement.

WARNING: System will not operate with dust cover in place.

DC Operation Detector Testing

Basic Unit Test

With power applied to the Duct Detector, introduce aerosol using the 553-673 Smoke Detector Aerosol Tester into the Duct Detector through the test port holes (Figure 1). Or, place the 553-810 Magnet Tester next to the test location on the clear Housing Cover (Figure 16). Observe "ALARM" LED operation on the detector or the "ALARM" LED on the interface PCB for DUCT Sensors. Restore normal operation to detector by doing a system reset at the panel, or by momentarily removing power, or by removing and replacing the detector head. Restore normal operation to sensor by doing a system reset at the panel.

Periodic Air Test

With the air handling unit turned on, and all filters and dampers in place, open one of the test port holes (Figure 1) by removing one of the red covers marked "Test" on the Duct Detector/Sensor. Measure the airspeed velocity inside the duct housing using the Alnor Instrument Co. Air Velocity Meter (Model 8500) or equivalent (not supplied).

Note: Refer to manufacturer instructions when performing this test.

Insert the probe in the test opening and measure the airspeed directly in front of the sampling tube. Airspeed measured at this point should be 200 fpm or greater. Airspeed measured at the inlet is typically 40% – 60% of the actual airspeed in the duct housing. Any deviation from the recommended installation rules described previously can cause this measurement to be unreliable.

If the airspeed measurement is less than 200 fpm, then a direct airspeed measurement should be taken inside the duct. Airspeed inside the duct should be between 300 fpm and 4000 fpm (91 to 1220m/min) for proper operation of the smoke detector/sensor.

Airspeed below 200 fpm measured inside of the duct detector/sensor may indicate a sampling or exhaust tube obstructed by debris. Tubes should be inspected and cleaned as required.

IMPORTANT: Make sure the test port covers are replaced after testing.

Continued on next page

Magnetic Test for Detectors and Sensors

Note: Refer to the *4098 Detectors, Sensors, and Bases Application Manual (574-709)* for detailed information on Detectors and Sensors.

Sensor Magnet Test

The following test method is suitable for functional checks of sensor bases during installation; however, testing with aerosol must be performed to comply with NFPA requirements.

Position the 553-810 Magnet Tester on the cover side, below either of the arrow marks (see Figure 16), **not between the two arrow marks**. Testing a sensor with a magnet reports a value of 255 for actual / peak (exception 4010 panel). Clear the peak value after testing.

Detector Magnet Test

The 4098-9601 photoelectric detector may be tested by placing a magnet at the location indicated by a "**TEST**" mark embossed on the cover **for four (4) seconds** (see Figure 16). Use the Simplex Magnet Tester (Part No. 553-810), Table 4, and the following information to test detectors.

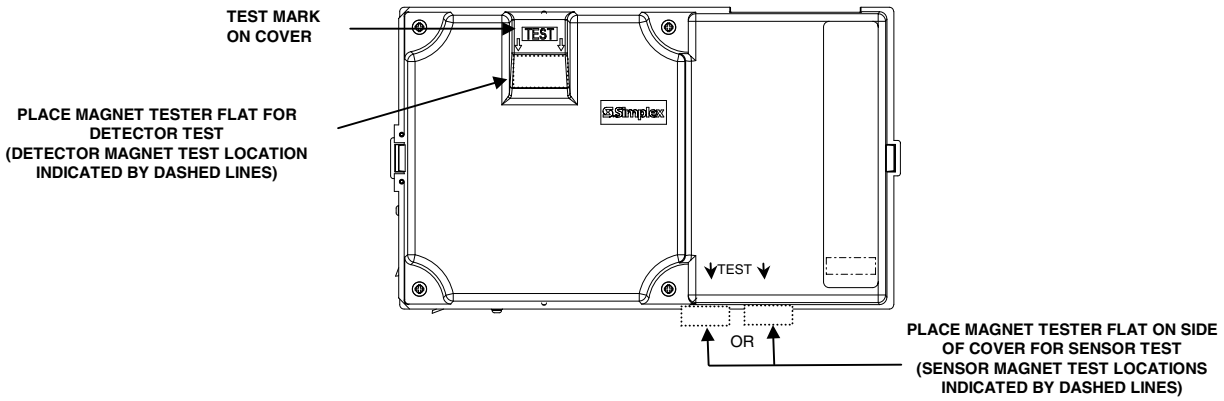

Figure 16. Magnet Test Location

Table 4 describes the Detector LED reaction during Normal and MAG TEST modes to the Normal, More Sensitive, Less Sensitive, and Non-Functional states of the detector.

Table 4. MAG TEST/Normal Modes - States and Reactions

STATE	Normal Mode	MAG TEST Mode		
	LED flashes every 4 secs.	LED Flashes Quickly 6 Times in 3 secs.	LED Flashes Slowly 4 Times in 8 secs.	Latches in Alarm Mode/LED stays "ON"
Normal	X			X
More Sensitive	X	X		X
Less Sensitive	X		X	X
Non-Functional			X	

Continued on next page

Magnetic Test for Detectors and Sensors (*continued)*

When placing the magnet near the location (see Figure 16) indicated by a "**TEST**" mark embossed on the cover, the visible LED flashes indicating the detector's condition. The following are descriptions of what you should see when using the MAG TEST.

- NORMAL - When in MAG TEST, the detector latches into alarm if the detector is within calibration range and the visible LED stays ON.
- MORE SENSITIVE - When in MAG TEST, if the detector is more sensitive than the maximum calibration, the visible LED *quickly* flashes, twice a second. Following the sixth flash, the detector latches into alarm and the visible LED stays ON.
- LESS SENSITIVE - When in MAG TEST, if the detector is less sensitive than the minimum calibration, the visible LED *slowly* flashes four times, once every two seconds. Following the fourth flash, the detector latches into alarm and the visible LED stays ON.
- NON-FUNCTIONAL - If the detector is less sensitive than the minimum allowable sensitivity, the visible LED does not flash normally. When in MAG TEST, the visible LED *slowly* flashes four times, once every two seconds. After the fourth flash, the detector does NOT latch into alarm and the LED stops flashing and turns OFF.

  If the detector is out of the normal operating range, it should be cleaned. If the detector still indicates as other than normal sensitivity, replace the detector.

Preferred Method of Testing Smoke Detectors/Sensors

NFPA requires annual testing of the detectors/sensors at their installed location using smoke or aerosol. With the air handling unit turned on, open one of test port holes (Figure 1) by removing the red cover on the duct detector/sensor housing. Using an extended nozzle on the smoke detector aerosol tester (553-673) spray a 4-second burst of aerosol through the test port but not directly at the detector/sensor head. The nozzle of the smoke detector aerosol tester should not extend beyond the inlet tube (see Figure 17). Aerosol is sprayed into the stream of incoming air and not directly into detector/sensor.

IMPORTANT: Make sure the test port covers are replaced after testing.

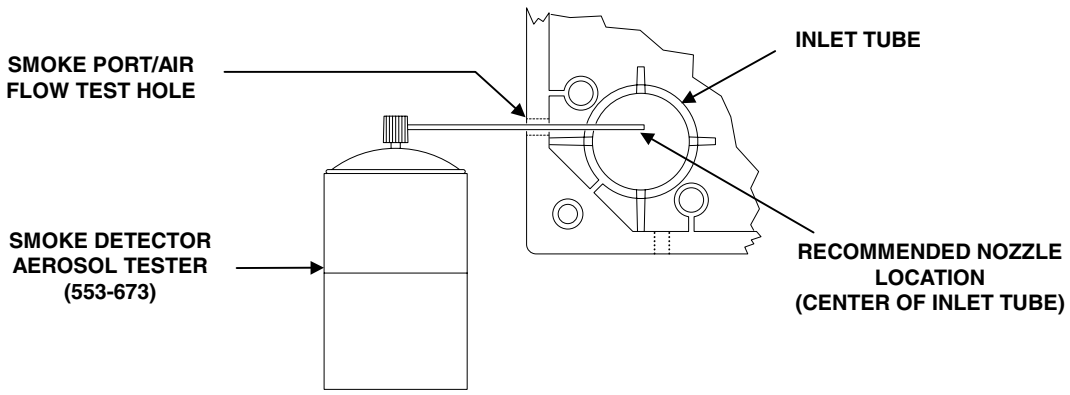

Figure 17. Smoke Detector Aerosol Test

Continued on next page

DC Operation Detector/Sensor Testing

Basic Unit Test

With the air handling unit OFF and power applied to the air duct detector/sensor, introduce aerosol into the detector/sensor or activate the built-in test feature as described in the *4098 Detectors, Sensors, and Bases Application Manual 574-709*. Observe alarm LED operation. Restore normal operation to the detector by doing a system reset at the panel, or by momentarily removing power, or by removing and replacing the detector head after aerosol has been cleared from its chamber. Restore normal operation to the sensor by doing a system reset at the panel.

Basic Unit Test with 4098-9830 or 2098-9808 Option

Perform the basic unit test above and observe both alarm LED operation of the detector/sensor and remote alarm indicator. Restore normal operation to the detector by doing a system reset at the panel, or by momentarily removing power, or by removing and replacing the detector head after aerosol has been cleared from its chamber. Restore normal operation to the sensor by doing a system reset at the panel.

Basic Unit Test with 4098-9834 or 2098-9806 Option

Perform the basic unit test above and observe both alarm LED operation of detector/sensor and remote alarm indicator. Restore normal operation to detector by doing a system reset at the panel, or by momentarily removing power, or by removing and replacing the detector head after aerosol has been cleared from its chamber. Restore normal operation to the sensor by doing a system reset at the panel.

An alternate test method is to insert the key into the keyswitch and turn the key clockwise to test. Observe alarm LED operation of the detector/sensor and remote alarm indicator. Restore normal operation to the detector by doing a system reset at the panel, or by momentarily removing power, or by removing and replacing the detector head. Restore normal operation to the sensor by doing a system reset at the panel.

Basic Unit Test with 4098-9835 Option

Perform the basic unit test above, the green LED indicator glows when power is ON. Use with 4098-9686 only.

An alternate test method is to insert the key into the keyswitch and turn the key clockwise to test. Observe alarm LED operation of the detector and remote alarm indicator. Restore normal operation to the detector by doing a system reset at the panel, or by momentarily removing power, or by removing and replacing the detector head.

Continued on next page

Air Differential Pressure Test

With the air handling unit turned on and all filters and dampers in place, measure the air differential pressure using a Dwyer Instrument Co. (Michigan City, Ind.) No. 20026 0 to 2" H_2O (or equivalent) differential pressure gauge.

Take measurements from inside of the detector/sensor housing before the cover is installed. Measure the difference in pressure between the intake tube and the exhaust tube. The pressure differential for all duct velocities between 300 and 4000 feet per minute (91 to 1220 M/min.) shall not be less than 0.015 inches (.381 mm) of water nor greater than 1.55 inches (39.370 mm) of water.

After testing is completed, secure the clear plastic cover to the housing using the four screws (**Torque screws to 8-10 inch-pounds**).

Maintenance

The duct housing sampling tube holes should be checked periodically for cleanliness, thus assuring easy air entry. Any dust or debris should be removed from tube or tube holes.

The maintenance program of the particular detector/sensor used should be carried out in accordance with the detector/sensor installation instructions. Vacuuming the detector/sensor air entry areas should be performed annually, or as required.

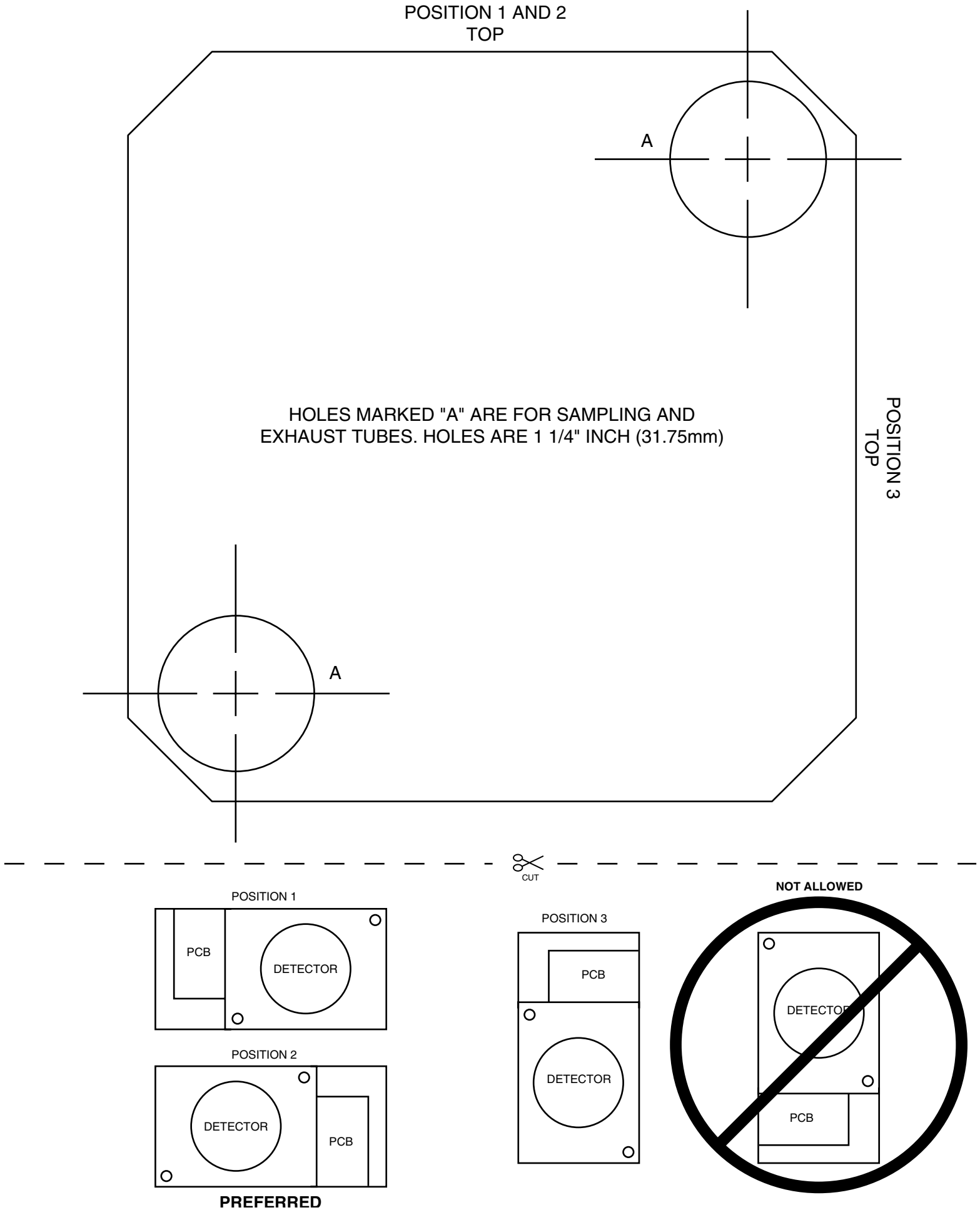

Figure 18. Duct Detector/Sensor Mounting Template

Simplex®

Rev. C

Simplex Time Recorder Co., • Simplex Plaza • Westminster, Massachusetts 01441-0001 U.S.A.
Simplex International Time Equipment, Co., LTD. • Mississauga, Ontario, Canada

574-776