Honeywell
THE POWER OF CONNECTED | 30 Series

WDR 2 MP/5 MP IR Rugged Mini Dome Camera

HC30W42R3 HC30W45R3

Quick Installation Guide

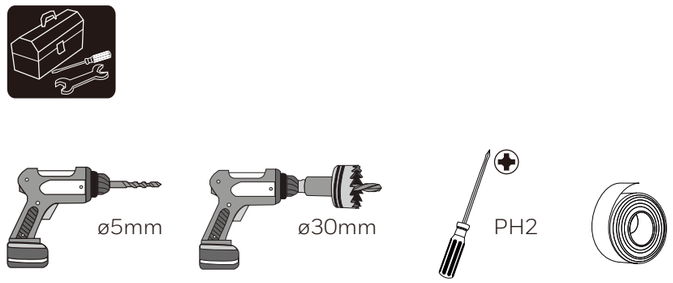

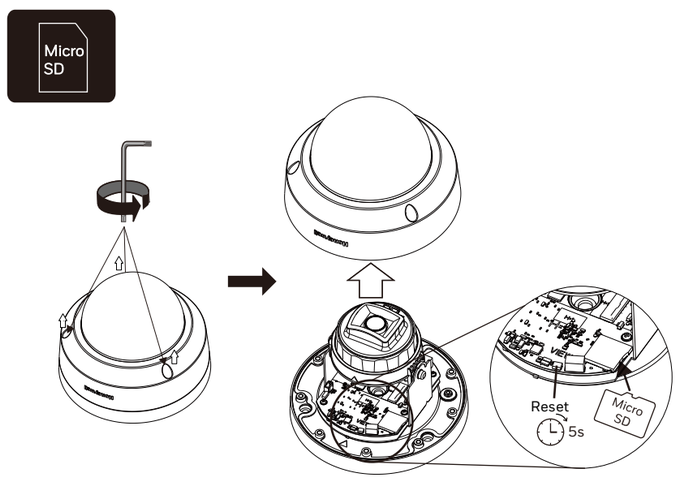

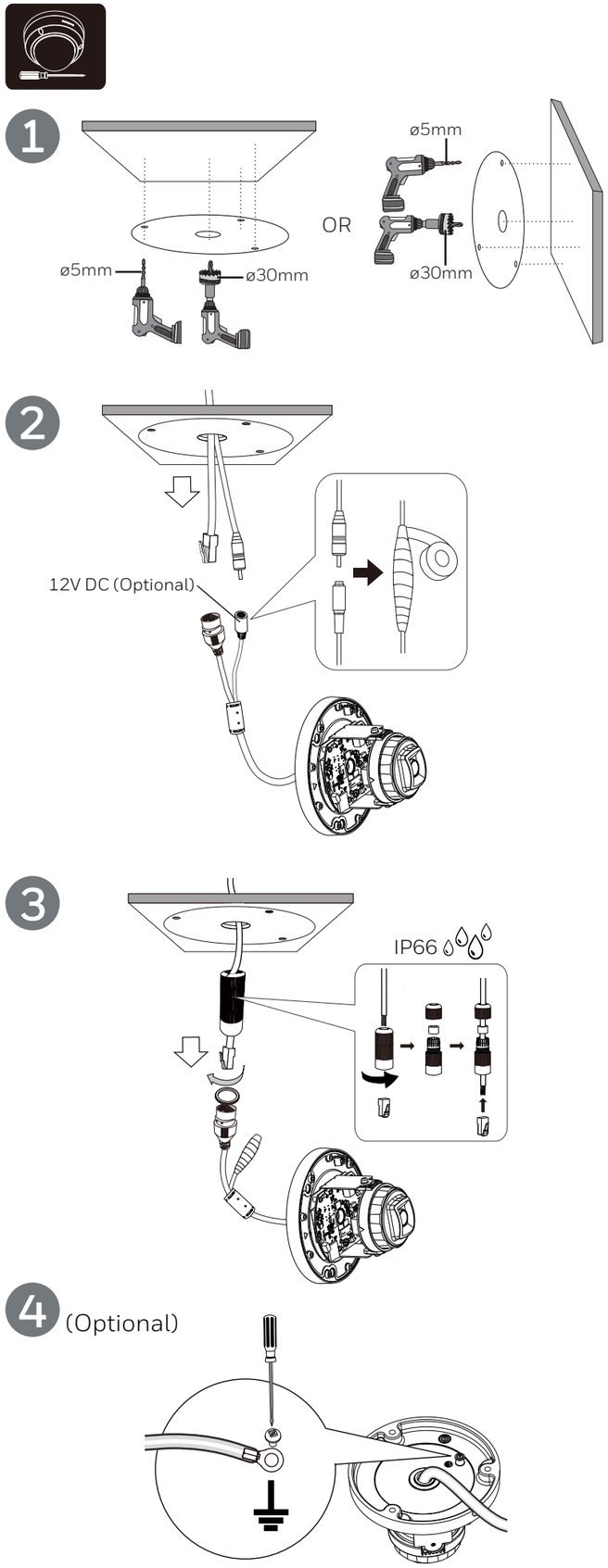

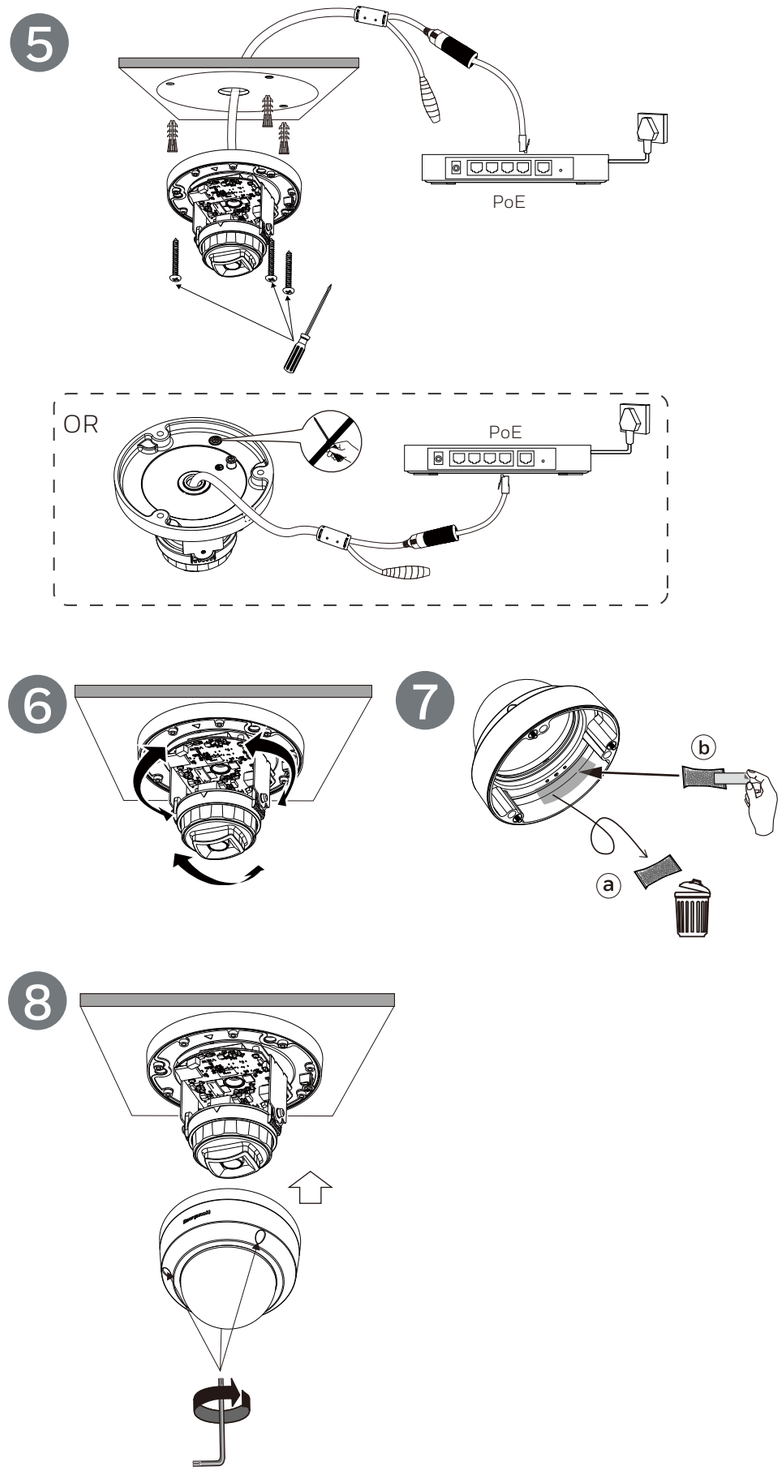

Logging On to the Camera

If logging on the camera remotely from a PC, install the Honeywell Config Tool from the software and documentation CD, find the camera on the network, and then open the web browser with the Honeywell Config Tool. The default user name is **admin** (case-sensitive) and the default password is **1234**.

Note
- Internet Explorer 11 (or later) with ActiveX plug-in is supported.
- Chrome 71 (or later) is supported for H.264 video. Chrome is not supported for H.265 video.
- IP address of the device is assigned automatically by DHCP server. If the DHCP server is not available, the device will acquire **192.168.1.108** as the default IP address.

Support Brackets

HQA-BB2	Junction Box
HQA-PK	Pendant Mount Cap
HQA-PM2 with HQA-BB2	Pole Mount

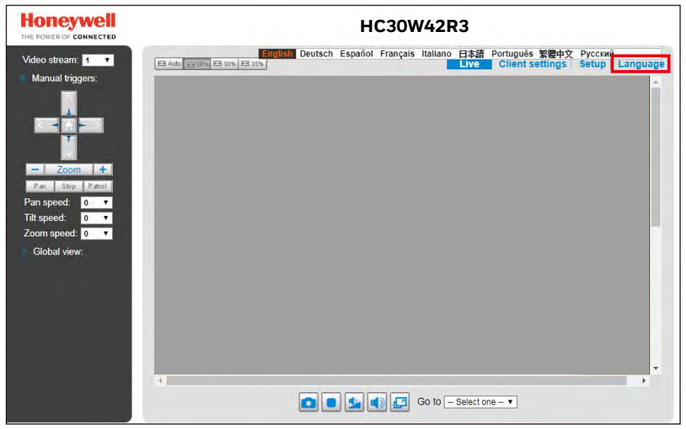

Cautions and Warnings

CAUTION RISK OF ELECTRIC SHOCK DO NOT OPEN	THIS SYMBOL INDICATES THAT DANGEROUS VOLTAGE CONSTITUTING A RISK OF ELECTRIC SHOCK IS PRESENT WITHIN THE UNIT.
CAUTION: TO REDUCE THE RISK OF ELECTRIC SHOCK, DO NOT REMOVE COVER (OR BACK). NO USER SERVICEABLE PARTS INSIDE. REFER SERVICING TO QUALIFIED SERVICE PERSONNEL.	THIS SYMBOL INDICATES THAT IMPORTANT OPERATING AND MAINTENANCE INSTRUCTIONS ACCOMPANY THIS UNIT.

WARNING To ensure compliance with electrical safety standards, CSA Certified/UL Listed LPS or Class 2 power adapters are required. Power over Ethernet (PoE) shall be provided by listed Information Technology Equipment meeting the IEEE 802.3af PoE standard. The PoE is not intended to be connected to exposed (outside plant) networks.

Important Safeguards

- Read and keep these instructions.
- Please ensure that your installation area can safely support the weight of the camera.
- Do not aim the camera toward a bright light source for extended periods to prevent damage to the imager. Avoid operating the unit under or close to unstable light sources (may cause flickering), or close to fluorescent lamps or objects reflecting light.
- Do not touch the camera lens.
- Do not drop the camera or subject it to physical shock.
- Do not use a strong or abrasive detergent when cleaning the camera.
- Avoid operating or storing the unit in extremely humid, dusty, hot/cold environments, where the operating temperature is outside the recommended range of -22°F to 140°F (-30°C to 60°C).
- Avoid operating the unit close to sources of powerful electromagnetic radiation, such as radio or TV transmitters.
- If powered by a power adapter, the adapter should be properly grounded. Consult Honeywell for the recommended adapter or check it in Honeywell DOC.

Regulatory Statements

FCC Statement of Compliance

Information to the User: This equipment has been tested and found to comply with the limits for a Class B digital device, pursuant to part 15 of the FCC Rules. These limits are designed to provide reasonable protection against harmful interference when the equipment is operated in a commercial environment. This equipment generates, uses, and can radiate radio frequency energy and, if not installed and used in accordance with the instruction manual, may cause harmful interference to radio communications. Operation of this equipment in a residential area is likely to cause harmful interference in which case the user will be required to correct the interference at his own expense.

Note Changes or modifications not expressly approved by the party responsible for compliance could void the user's authority to operate the equipment.

Manufacturer's Declaration of Conformance

The manufacturer declares that the equipment supplied with this guide is compliant with the European Parliament and Council Directive on the Restrictions of the use of certain hazardous substances in electrical and electronic equipment (2011/65/EU), General Product Safety Directive (2001/95/EC), and the essential requirements of the EMC Directive (2014/30/EU), conforming to the requirements of standards EN 55032 for emissions, EN 50130-4 for immunity, and EN 62368-1 for electrical equipment safety.

Waste Electrical and Electronic Equipment (WEEE)

Correct Disposal of this Product (applicable in the European Union and other European countries with separate collection systems).

This product should be disposed of, at the end of its useful life, as per applicable local laws, regulations, and procedures.

Honeywell

www.honeywell.com/security
+1 800 323 4576 (North America only)

Document 800-25039V1 – Rev A – 05/2019

© 2019 Honeywell International Inc. All rights reserved. No part of this publication may be reproduced by any means without written permission from Honeywell. The information in this publication is believed to be accurate in all respects. However, Honeywell cannot assume responsibility for any consequences resulting from the use thereof. The information contained herein is subject to change without notice. Revisions or new editions to this publication may be issued to incorporate such changes. For patent information, see www.honeywell.com/patent.