DATA SHEET

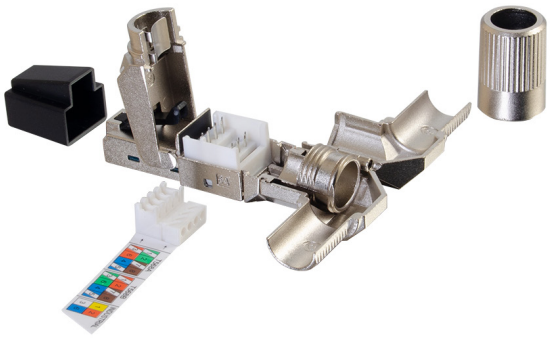

Shielded Category 6A 90-Degree Field Terminable Plug

OVERVIEW

Shielded 90-Degree Category 6A field terminable PCB wired 8 position modular plugs, able to be terminated to either T568A or B wiring, 5 pack of plugs, no special tools required. Supports 22-26AWG solid conductors and 23-26AAWG stranded conductors. Installer friendly lacing sled with attached wiring label supports accurate IDC termination with parallel joint pliers. Printed circuitry offers better control and eliminate noise between conductors and 50 micro inch plated plug contacts. Supports up to 5 re-terminations. Condense size of the terminated plug makes this plug compatible with most modular applications. Qualified to 1.5 amps for PoE applications.

ITEM DESCRIPTION

FTPSC6A90-5PK - Shielded Category 6A 90-Degree Field Terminable 8 Position Modular Plugs, 5pk

FEATURES

- **Meets category 6A channel performance:** Supports up to 10G
- **ETL verified to category 6a component standard:** Ensures standards compliance
- **Circuit traces:** Each circuit trace is rated to 100W, 1.5A
- **Superior protection against EMI:** Minimizes disturbances in data transmission
- **Industry leading alien cross-talk performance:** Minimizes noise from adjacent wire pairs
- **Better heat dissipation:** Ideal for high-power PoE applications
- **90-degree cable elbow:** Enables 8 position cable exit to maximize installation positions
- **Easy lace wiring sled:** Reduces wiring time
- **Easy to follow attached universal wiring label:** Quick and user-friendly, eliminates confusion
- **Internal printed circuitry:** Controls / eliminates noise from conductors thru plug
- **RoHS compliant:** Lead free
- **Rated for 1.5+ amps:** Will support higher power PoE (60-100 watt) with margin

DATA SHEET

SPECIFICATIONS:
Shielded Category 6A 90-Degree Field Terminable Plug

GENERAL INFORMATION
- Color: Silver
- Footprint: RJ45 Plug
- UL Standards Tested: UL 1863, 2043
- Product Series: Field Term Plug
- Type: 90-Degree Modular Plug

TECHNICAL INFORMATION
- Category Rating: Cat6a

LISTING AGENCIES/THIRD PARTY CERTIFICATIONS
- ETL Certified: Yes
- RoHS: Yes
- UL Listing Number: 1863, 2043

DIMENSIONS
- Depth (Metric): 61.2mm
- Depth (US): 2.41 in.
- Height (Metric): 15.1mm
- Height (US): 0.6 in.
- Width (Metric): 14mm
- Width (US): 0.55 in.

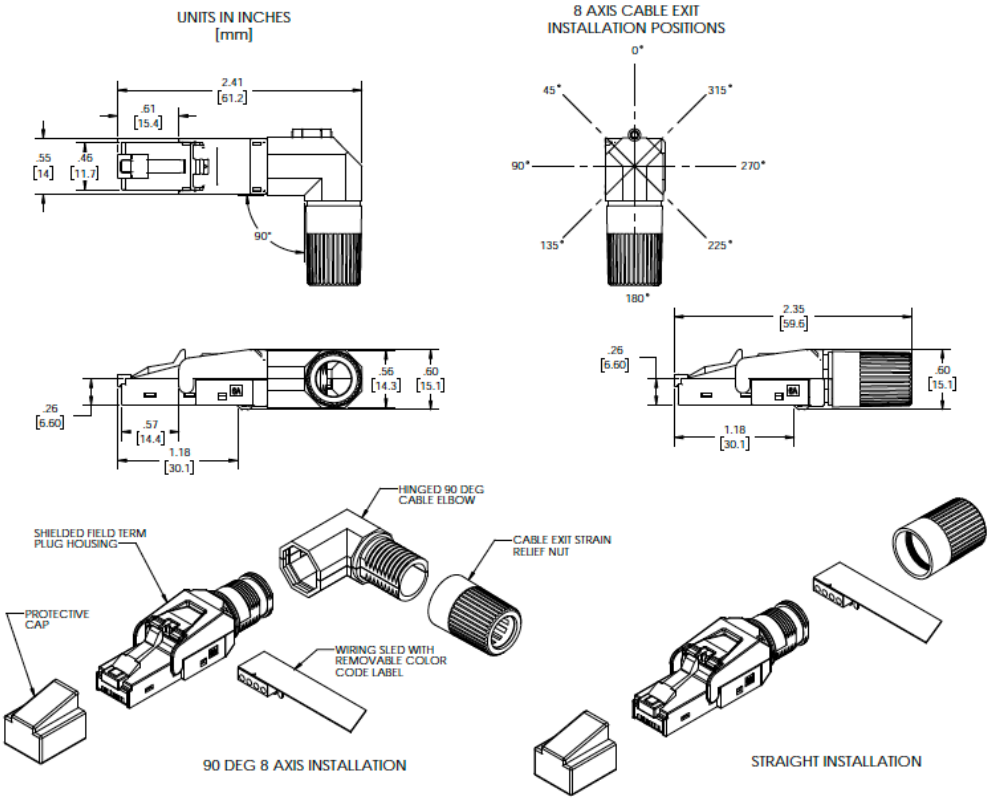

© 2019 Legrand All Rights Reserved rev.06/19 Data Sheet – 15437

Legrand, North and Central America

60 Woodlawn Street
West Hartford, CT 06110
1.877.BY.LEGRAND (295.3472)
www.legrand.us