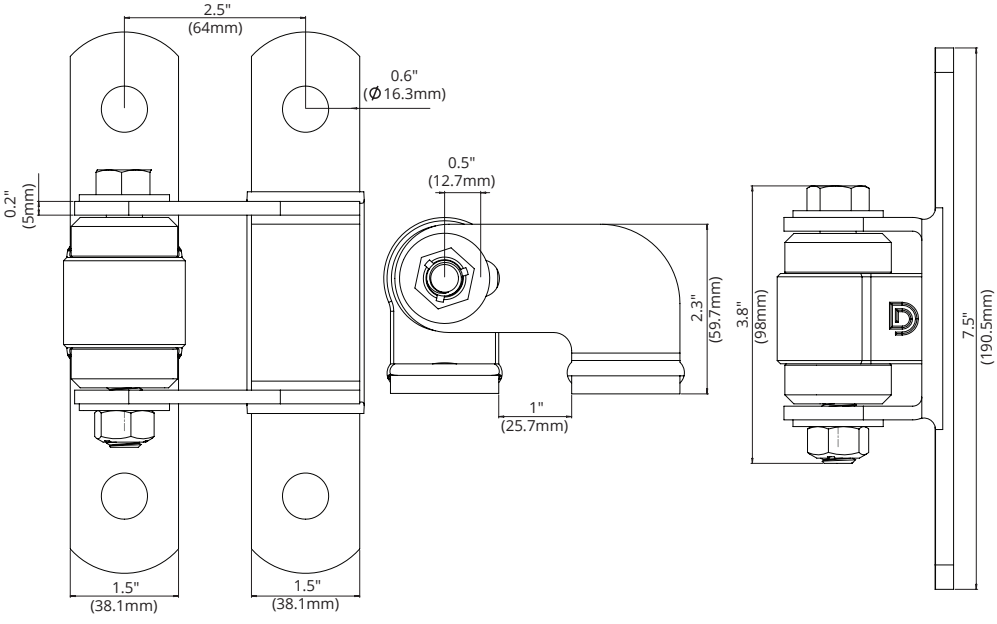
2.5"
(64mm)
0.6"
(∅16.3mm)
0.2"
(5mm)
0.5"
(12.7mm)
2.3"
(59.7mm)
1"
(25.7mm)
3.8"
(98mm)
7.5"
(190.5mm)
1.5"
(38.1mm)
1.5"
(38.1mm)