Title: Overview of Automotive EMI Reduction Techniques

Short Description: This talk will provide a high level overview of power converter techniques to reduce EMI in automotive applications. The goal is to help designers understand CISPR 25 automotive EMI requirements and to equip them with some tools to achieve passing designs.

Target Audience: Power electronics professionals, systems engineers/architects, purchasing agents, government agencies, and other industry support personnel.

Proposed Content: A slide outline is shown below along with some example figures. The goal is to inform a broad audience about EMI basics, automotive requirements, and design techniques for automotive EMI reduction.

1. Intro: Why is EMI important in auto?
2. Background: Sources of emissions from within power supplies
3. Background: Automotive emissions requirements (CISPR 25)
4. Background: CISPR 25 vs. CISPR 22/32 requirements
5. Understand: Overview diagram of automotive front end
6. Understand: Differential mode vs. common mode noise
7. Understand: Differential mode EMI filter

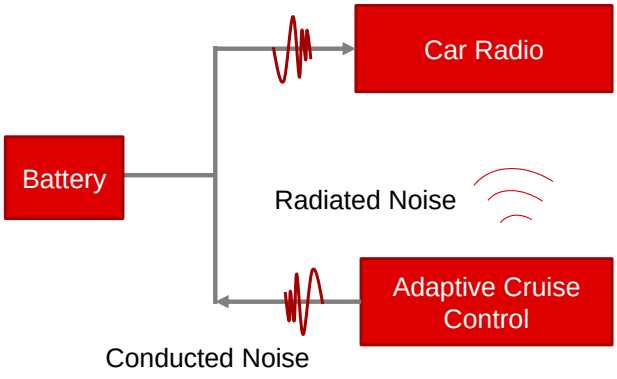

Fig. 1: Conducted and radiated noise must be mitigated in automotive systems

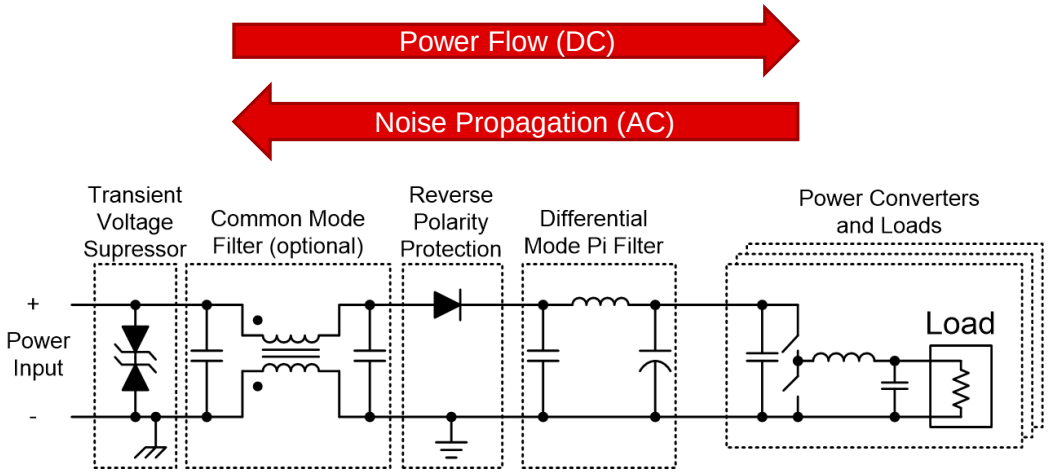

Fig. 2: Overview diagram of an automotive system with EMI filtering and protection circuits

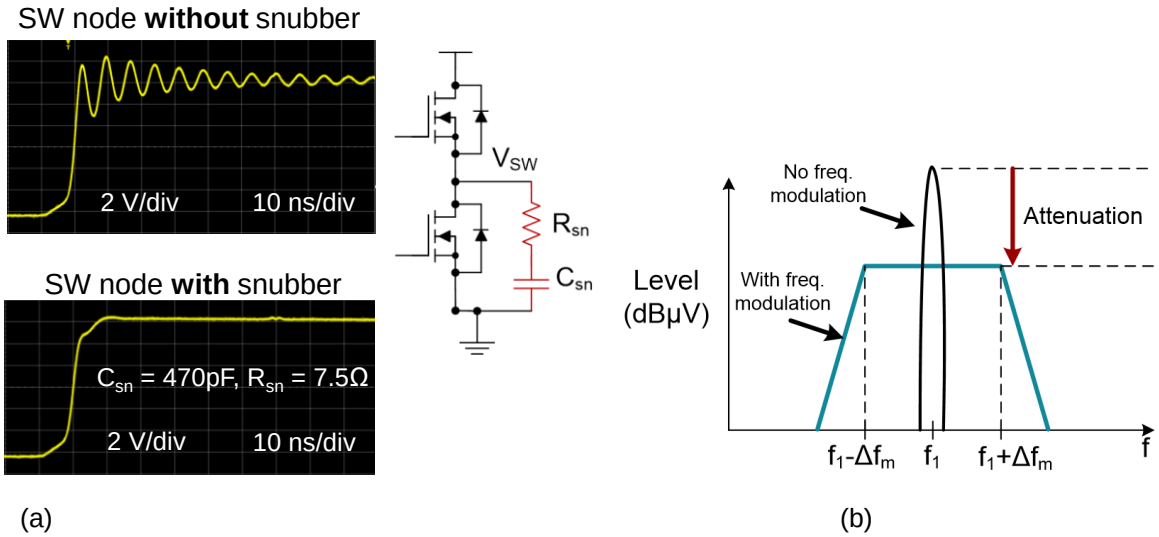

(a) (b)

Fig. 3: Example EMI reduction techniques include (a) snubber circuits and (b) frequency spreading

8. Understand: Impact of parasitics to EMI filter design
9. Understand: Sources of common mode noise
10. Technique: How to reduce capacitive coupling
11. Technique: How to avoid making antennas
12. Technique: Slow down switch node slew rates
13. Technique: Snubber circuits
14. Technique: Spread spectrum/frequency dithering
15. Technique: Shielding and clamp on ferrites
16. Testing: CISPR 25 test setups overview
17. Testing: Conducted test setup example
18. Testing: Radiated test setup example
19. Conclusion: Summary of techniques and references to more information for further learning

Speaker Bio:

Pradeep Shenoy manages Texas Instrument's Power Design Services team focused on automotive systems. He previously worked in TI's Kilby R&D Labs and in the Buck Switching Regulators business unit. He has presented technical and industry presentations at APEC nearly every year since 2011 and has served as a dc-dc track co-chair the past 5 years. He received a Ph.D. degree from the University of Illinois, Urbana-Champaign. He received the Illinois International Graduate Achievement Award in 2010 and the Jack Kilby Award for innovation in 2015. He serves as the North America Regional Chair and an Ad Com Member for the IEEE Power Electronics Society.